R-1518

TECHNICAL MANUAL
No. 11-5820-770-14

HEADQUARTERS
DEPARTMENT OF THE ARMY
WASHINGTON, DC *23 August 1976*

OPERATOR'S, ORGANIZATIONAL, DIRECT SUPPORT, AND GENERAL SUPPORT MAINTENANCE MANUAL

RECEIVING SET, RADIO AN/URR-71

(NSN 5820-00-013-8944)

REPORTING ERRORS AND RECOMMENDING IMPROVEMENTS

You can help improve this manual. If you find any mistakes or if you know of a way to improve the procedures, please let us know. Mail your letter, DA Form 2028 (Recommended Changes to Publications and Blank Forms), or DA Form 2028-2 located in back of this manual direct to: Commander, US Army Communications-Electronics Command and Fort Monmouth, ATTN: DRSEL-ME-MP, Fort Monmouth, New Jersey 07703. In either case, a reply will be furnished direct to you.

		Paragraph	Page
CHAPTER 1.	INTRODUCTION		
Section I.	General	1-1	1-1
II.	Description and data	1-5	1-1
CHAPTER 2.	SERVICE UPON RECEIPT AND INSTALLATION		
Section I.	Site and shelter requirements	2-1	2-1
II.	Service upon receipt	2-3	2-1
III.	Installation instructions	2-5	2-3
CHAPTER 3.	OPERATING INSTRUCTIONS		
Section I.	Controls and indicators	3-1	3-1
II.	Operation under usual conditions	3-3	3-2
III.	Operation under unusual conditions	3-7	3-3
IV.	Preparation for movement	3-10	3-4
CHAPTER 4.	MAINTENANCE		
Section I.	General	4-1	4-1
II.	Operator/crew maintenance	4-4	4-1
III.	Troubleshooting	4-9	4-2
IV.	Organizational maintenance	4-11	4-2
CHAPTER 5.	FUNCTIONING OF EQUIPMENT		
Section I.	Unit functioning	5-1	5-1
II.	Gear and tuner assembly	5-3	5-2
III.	AM receiver and subsystem	5-7	5-3
IV.	FM receiver subsystem	5-9	5-4
V.	Dust cover	5-11	5-5
CHAPTER 6.	DIRECT SUPPORT MAINTENANCE		
Section I.	General	6-1	6-1
II.	Troubleshooting	6-3	6-1
III.	Maintenance	6-5	6-4
IV.	Testing	6-10	6-6

		Paragraph	Page
PTER 7.	GENERAL SUPPORT MAINTENANCE	7-1	7-1
ection I.	General	7-3	7-1
II.	Troubleshooting	7-5	7-3
III.	Maintenance	7-10	7-19
IV.	Subassembly testing		
PENDIX A.	REFERENCES		A-1
PENDIX B.	MAINTENANCE ALLOCATION		B-1
ection I.	Introduction		B-3
II.	Maintenance allocation chart		
EX			Index 1

LIST OF ILLUSTRATIONS

Figure	Title	Page
1-1	Receiving Set, Radio AN/URR-71	1-0
2-1	Typical packing diagram	2-2
2-2	Typical manpack installation	2-3
2-3	Typcial fixed installation	2-5
2-4	Typcial vehicular installation	2-6
3-1	Controls, indicators, and connectors	3-1
5-1	Block diagram, AM receiver subsystem integrated circuit	5-4
5-2	Block diagram, FM receiver subsystem integrated circuit	5-5
6-1	Panel meter test connections	6-7
6-2	AM and CW sensitivity test connections	6-7
6-3	FM sensitivity test connections	6-8
6-4	Frequency calibrator accuracy test connections	6-9
6-5	Dial readout error tes. connections	6-9
6-6	Discriminator output test connections	6-11
6-7	Diode output test connections	6-12
6-8	AM whip sensitivity test connections	6-12
6-9	IF amplifier gain adjustment connections	6-13
6-10	Front apnel component terminal numbering	6-14
6-11	Connector pin numbering	6-14
6-12	Low pass filter fabrication	6-17
6-13	Low pass filter test connections	6-17
6-14	Gain test connections	6-18
6-15	IF amplifier assembly test connections	6-19
6-16	Detector assembly test connection	6-20
6-17	Power supply assembly test connections	6-21
6-18	Calibration oscillator test connections	6-22
6-19	Dust cover connector and switch pin numbering	6-22
7-1	Motherboard, A1A1A2A1A1A1, parts location	7-6
7-2	RF preselector, A1A1A2A1A2, parts location	7-7
7-3	First RF amplifier, A1A1A2A1A3, parts location	7-8
7-4	Second RF amplifier, A1A1A2A1A4, parts location	7-9
7-5	Third RF amplifier, A1A1A2A1A5, parts location	7-10
7-6	Oscillator-mixer, A1A1A2A1A6, parts location	7-11
7-7	IF amplifier, A1A1A2A3A1, parts location	7-12
7-8	Detector, A1A1A2A4A1, parts location	7-13
7-9	Power supply, A1A1A2A5A1, parts location	7-14
7-10	Regulator, A1A2A2A5A2, parts location	7-14
7-11	Calibration oscillator, A1A1A2A6A1, parts location	7-15
7-12	Reed switch lead forming dimensions	7-15
7-13	Reed switch mounting	7-15
7-14	Dial tape alignment	7-19
7-15	Local oscillator alignment connections	7-20
7-16	Power supply voltage measurement connections	7-29
7-17	Calibration oscillator voltage measurement connections	7-30
FO-1	Block diagram, AN/URR-71	
FO-2	Schematic diagram, AN/URR-71	
FO-3	Schematic diagram, dust cover	
FO-4	Simplified schematic diagram, RF tuner	
FO-5	Schematic diagram, motherboard	
FO-6	Schematic diagram, RF preselector	
FO-7	Schematic diagram, first RF amplifier	
FO-8	Schematic diagram, second RF amplifier	
FO-9	Schematic diagram, third RF amplifier	
FO-10	Schematic diagram, oscillator-mixer	
FO-11	Schematic diagram, IF amplifier	
FO-12	Schematic diagram, detector	
FO-13	Schematic diagram, power supply	
FO-14	Schematic diagram, calibration oscillator	
FO-15	Receiver, parts location	
FO-16	Dust cover, parts location	
FO-17	Radio assembly, parts location	
FO-18	Front panel, parts location	
FO-19	Gear and tuner assembly, parts location	
FO-20	Test point and adjustments location	
FO-21	Color code chart: resistor, inductor, and capacitor	

LIST OF ILLUSTRATIONS

Figure	Title	Page
1-1	Receiving Set, Radio AN/URR-71	1-6
1-2	Typical packing diagram	1-8
2-1	Typical antenna installations	2-2
2-2	Typical base installation	2-3
2-3	Typical mobile installation	2-4
2-4	Control, indicator, and connectors	2-5
3-1	Block diagram, FM receiver subsystem integrated circuit	3-4
3-2	Block diagram, FM receiver subsystem integrated circuit	3-5
6-1	Panel mount jack connections	6-6
6-2	AM and CW sensitivity test connections	6-7
6-3	FM sensitivity test connections	6-8
6-4	Frequency calibration accuracy test connections	6-9
6-5	Discriminator error test connections	6-10
6-6	Discrim. filter output test connections	6-11
6-7	Diode output test connections	6-12
6-8	AM rejection sensitivity test connections	6-13
6-9	IF amplifier gain adjustment connections	6-14
6-10	Front panel component terminal connections	6-15
6-11	Connector pin numbering	6-16
6-12	Top plate filter locations	6-17
6-13	Top plate filter test connections	6-18
6-14	Diode test points locations	6-19
6-15	IF amplifier assembly test connections	6-20
6-16	Detector assembly test connections	6-21
6-17	Power supply assembly test connections	6-22
6-18	Control unit assembly test connections	6-23
6-19	Digital unit connector and adjustment locations	6-24
7-1	Motherboard, A1A1/A2A1A1A1, parts location	7-6
7-2	RF preamplifier, A1A1/A2A1A1, parts location	7-7
7-3	First RF amplifier, A1A1/A2A1A2, parts location	7-8
7-4	Second RF amplifier, A1A1/A2A1A3, parts location	7-9
7-5	Third RF amplifier, A1A1/A2A1A4, parts location	7-10
7-6	Oscillator/mixer, A1A1/A2A1A5, parts location	7-11
7-7	IF amplifier, A1A1/A2A1A1, parts location	7-12
7-8	Detector, A1A1/A2A1A2, parts location	7-13
7-9	Power supply, A1A1/A2A1A3, parts location	7-14
7-10	Regulator, A1A2/A2A1A3, parts location	7-15
7-11	Control/audio assembly, A1A1/A2A1A1, parts location	7-16
7-12	Front panel and housing components	7-17
7-13	Front panel assembly	7-18
7-14	Dial and pointer	7-19
7-15	Local oscillator alignment connections	7-20
7-16	Power supply voltage measurement connections	7-21
7-17	Oscillator control voltage measurement connections	7-22
10-1	Block diagram, AN/URR-71	
10-2	Schematic diagram, AN/URR-71	
10-3	Schematic diagram, door cover	
10-4	Simplified schematic diagram, RF tuner	
10-5	Schematic diagram, motherboard	
10-6	Schematic diagram, RF preamplifier	
10-7	Schematic diagram, first RF amplifier	
10-8	Schematic diagram, second RF amplifier	
10-9	Schematic diagram, third RF amplifier	
10-10	Schematic diagram, oscillator mixer	
10-11	Schematic diagram, IF amplifier	
10-12	Schematic diagram, detector	
10-13	Schematic diagram, power supply	
10-14	Schematic diagram, regulator and control	
10-15	Digital unit, parts location	
10-16	Digital control, parts location	
10-17	Radio control, parts location	
10-18	Front panel, parts location	
10-19	Front and rear panels, parts location	
10-20	Front panel and keypad, parts location	
10-21	Color code chart, resistor, and capacitor	

LIST OF TABLES

Number	Title	Page
1-1	Items comprising an operable equipment	1-2
1-2	Technical characteristics	1-2
1-3	Common names and reference designations	1-3
3-1	Controls, indicators, and connectors	3-2
4-1	Operator/crew preventive maintenance checks and services	4-2
4-2	Operator's troubleshooting	4-3
4-3	Organizational troubleshooting	4-3
4-4	Organizational preventive maintenance checks and services	4-4
6-1	Direct support troubleshooting	6-1
6-2	Calibration frequencies	6-10
6-3	Radio assembly continuity and resistance checks	6-15
6-4	Front panel assembly continuity and resistance checks	6-16
6-5	Gain test frequencies	6-18
6-6	Bandwidth test levels	6-20
6-7	Dust cover continuity and resistance checks	6-23
7-1	Gear and tuner assembly troubleshooting	7-1
7-2	Motherboard troubleshooting	7-1
7-3	RF preselector troubleshooting	7-2
7-4	First RF amplifier troubleshooting	7-2
7-5	Second RF amplifier troubleshooting	7-2
7-6	Third RF amplifier troubleshooting	7-2
7-7	Oscillator-mixer troubleshooting	7-2
7-8	IF amplifier assembly troubleshooting	7-2
7-9	Detector assembly troubleshooting	7-3
7-10	Power supply assembly troubleshooting	7-3
7-11	Calibration oscillator assembly troubleshooting	7-3
7-12	Power suppply (A1A1A5) wire list	7-16
7-13	Receiver wire list	7-17
7-14	Motherboard continuity and resistance checks	7-21
7-15	RF preselector continuity and resistance checks	7-22
7-16	First RF amplifier continuity and resistance checks	7-23
7-17	Second RF amplifier continuity and resistance checks	7-23
7-18	Third RF amplifier continuity and resistance checks	7-24
7-19	Oscillator-mixer continuity and resistance checks	7-24
7-20	IF amplifier quiescent voltages	7-25
7-21	IF amplifier dynamic voltages	7-26
7-22	Detector quiescent voltages	7-27
7-23	Detector dynamic voltages	7-28
7-24	Power supply ac voltage measurements	7-29
7-25	Power supply dc voltage measurements	7-30
7-26	Calibration oscillator voltage measurements	7-31

LIST OF TABLES

Number	Title	Page
1-1	Items comprising an operable equipment	1-2
1-2	Technical characteristics	1-3
1-3	Common power and reference designations	1-5
2-1	Controls, indicators, and connectors	2-2
4-1	Operator tree preventive maintenance checks and services	4-2
4-2	Operation under unusual conditions	4-3
4-3	Organizational troubleshooting	4-4
4-4	Organizational preventive maintenance checks and services	4-7
6-1	Power supply troubleshooting	6-1
6-2	Calibration requirements	6-10
6-3	Radio assembly continuity and resistance checks	6-10
6-4	Front panel assembly continuity and resistance checks	6-10
6-5	Chassis test fixture cable	6-18
6-6	Receiver/exciter test fixture	6-20
6-7	Front panel continuity and resistance checks	6-21
7-1	Case and cover assembly troubleshooting	7-1
7-2	Motherboard troubleshooting	7-1
7-3	RF preselector troubleshooting	7-2
7-4	First RF amplifier troubleshooting	7-2
7-5	Second RF amplifier troubleshooting	7-2
7-6	Third RF amplifier troubleshooting	7-2
7-7	Oscillator-mixer troubleshooting	7-3
7-8	IF amplifier assembly troubleshooting	7-3
7-9	Detector assembly troubleshooting	7-3
7-10	Power supply assembly troubleshooting	7-3
7-11	Calibration oscillator assembly troubleshooting	7-3
7-12	Power supply (A1A1A3) voltages	7-10
7-13	Receiver end-to-end	7-11
7-14	Motherboard continuity and resistance checks	7-13
7-15	RF preselector continuity and resistance checks	7-15
7-16	First RF amplifier continuity and resistance checks	7-15
7-17	Second RF amplifier continuity and resistance checks	7-15
7-18	Third RF amplifier continuity and resistance checks	7-15
7-19	Oscillator-mixer continuity and resistance checks	7-16
7-20	IF amplifier operating voltages	7-19
7-21	IF amplifier operating voltages	7-19
7-22	Detector assembly voltages	7-19
7-23	Receiver dynamic voltages	7-20
7-24	Power supply dc voltage measurements	7-22
7-25	Power supply dc voltage measurements	7-23
7-26	Calibration oscillator voltage measurements	7-24

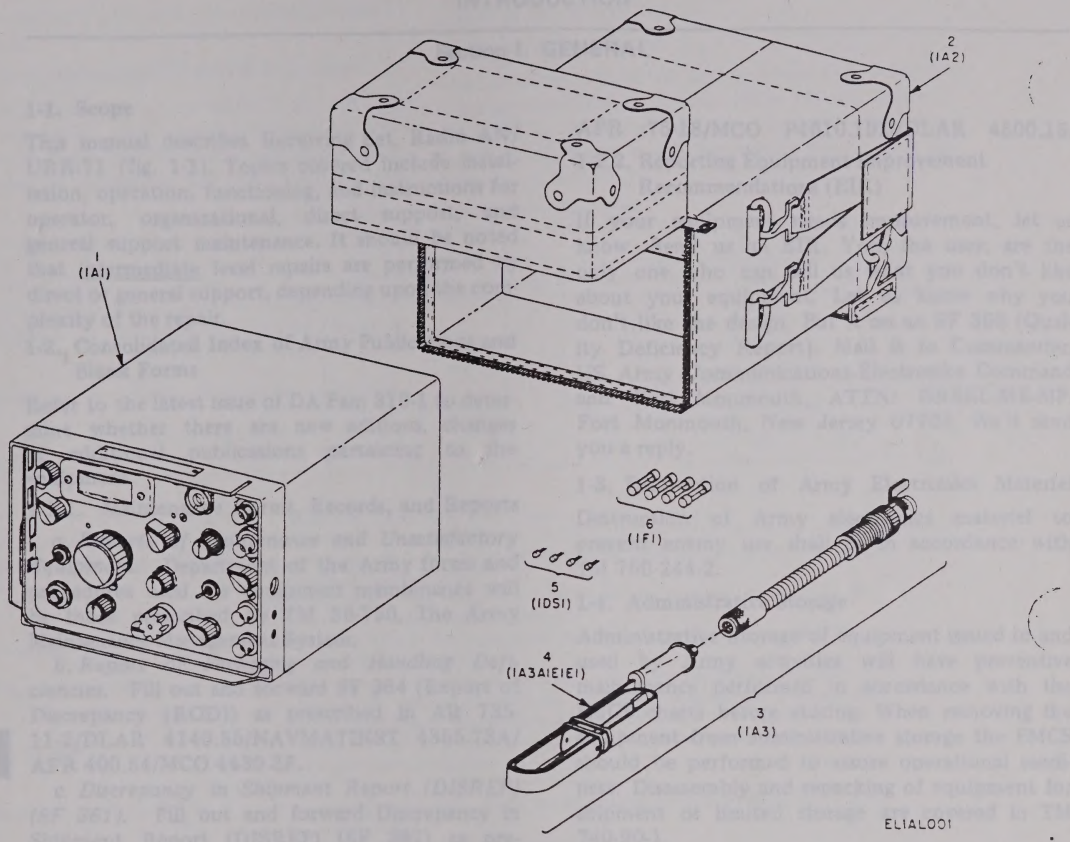

Figure 1-1. Receiving Set, Radio AN/URR-71.

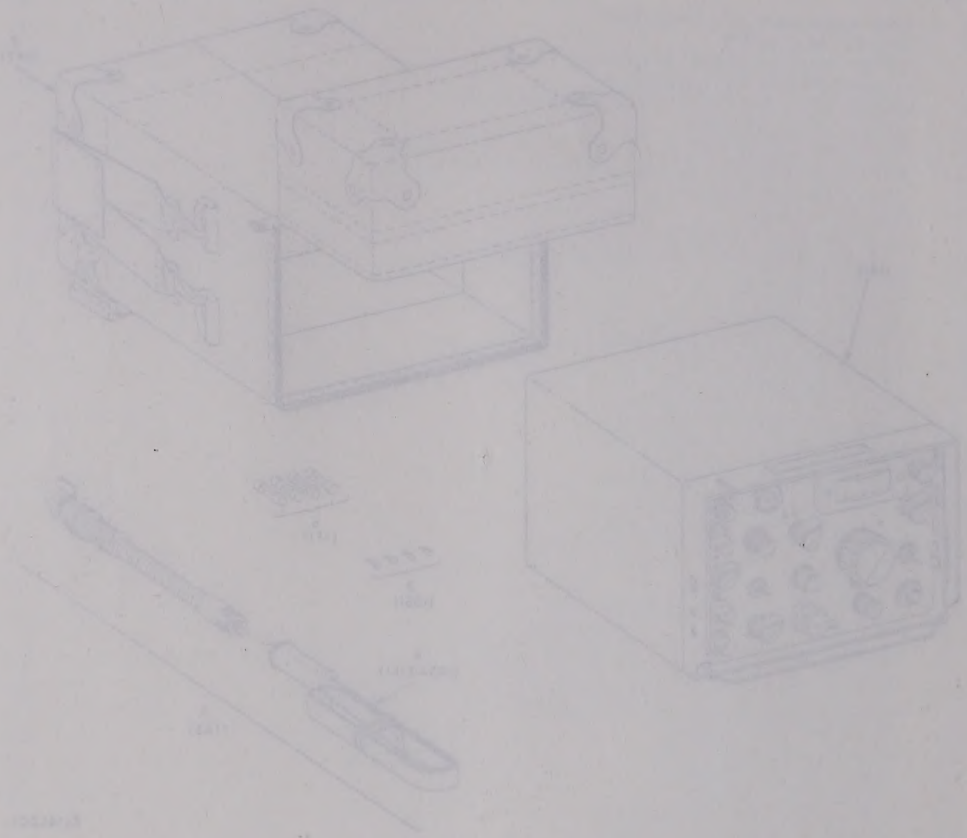

CHAPTER 1

INTRODUCTION

Section I. GENERAL

1-1. Scope

This manual describes Receiving Set, Radio AN/URR-71 (fig. 1-1). Topics covered include installation, operation, functioning, and instructions for operator, organizational, direct support, and general support maintenance. It should be noted that intermediate level repairs are performed by direct or general support, depending upon the complexity of the repair.

1-2. Consolidated Index of Army Publications and Blank Forms

Refer to the latest issue of DA Pam 310-1 to determine whether there are new editions, changes of additional publications pertaining to the equipment.

1-2.1. Maintenance Forms, Records, and Reports

a. Reports of Maintenance and Unsatisfactory Equipment. Department of the Army forms and procedures used for equipment maintenance will be those prescribed by TM 38-750, The Army Maintenance Management System.

b. Report of Packaging and Handling Deficiencies. Fill out and forward SF 364 (Report of Discrepancy (ROD)) as prescribed in AR 735-11-2/DLAR 4140.55/NAVMATINST 4355.73A/AFR 400.54/MCO 4430.3F.

c. Discrepancy in Shipment Report (DISREP) (SF 361). Fill out and forward Discrepancy in Shipment Report (DISREP) (SF 361) as prescribed in AR 55-38/NAVSUPINST 4610.33C/AFR 75-18/MCO P4610.19D/DLAR 4500.15.

1-2.2. Reporting Equipment Improvement Recommendations (EIR)

If your equipment needs improvement, let us know. Send us an EIR. You, the user, are the only one who can tell us what you don't like about your equipment. Let us know why you don't like the design. Put it on an SF 368 (Quality Deficiency Report). Mail it to Commander, US Army Communications-Electronics Command and Fort Monmouth, ATTN: DRSEL-ME-MP, Fort Monmouth, New Jersey 07703. We'll send you a reply.

1-3. Destruction of Army Electronics Materiel

Destruction of Army electronics materiel to prevent enemy use shall be in accordance with TM 750-244-2.

1-4. Administrative Storage

Administrative Storage of equipment issued to and used by Army activities will have preventive maintenance performed in accordance with the PMCS charts before storing. When removing the equipment from administrative storage the PMCS should be performed to assure operational readiness. Disassembly and repacking of equipment for shipment or limited storage are covered in TM 740-90-1.

Section II. DESCRIPTION AND DATA

1-5. Purpose and Use

Receiving Set, Radio AN/URR-71 is a solid state superheterodyne receiving set. The receiver frequency range is in the 19.0 to 157.5 MHz band operating from fixed sites, vehicular installations, or as a backpack radio. Operating modes include AM, FM, and CW. This radio set may be powered by 220 vac, 110 vac, 24 vdc external power, or from internal batteries.

1-6. Description

a. Receiving Set, Radio AN/URR-71. Receiving Set, Radio AN/URR-71 (fig. 1-1) consists of Receiver R-1518/UR, Antenna AS-2887/UR, and Field Pack CW-1005/UR. These items are described in the following subparagraphs.

b. Receiver R-1518/UR. Receiver R-1518/UR (1, figure 1-1) is housed in a rectangular metal case. Operating controls, indicators and connectors are installed on the front and rear panels of the unit. The metal case detaches from the front panel and may be removed to provide access for internal maintenance. A rear cover may be removed from the case for battery installation.

c. Antenna AS-2887/UR. Antenna AS-2887/UR (3, fig. 1-1) is a whip antenna terminated by a male TNC connector suitable for use with Receiver R-1518/UR antenna input connector #1.

d. Field Pack CW-1005/UR. Field Pack CW-1005/UR (2, fig. 1-1) is a cotton duck carrying case capable of containing Receiver R-1518/UR, Antenna AS-2887/UR, and running spare lamps and fuses (5

and 6, fig. 1-1).

1-7. Calibration

Refer to chapter 6 of this manual for calibration of the receiver.

1-8. Items Comprising an Operable Equipment

The items comprising an operable equipment are listed in table 1-1. For operation with other than batteries (12 type BA-30/U) a power cable (available as part of Accessory Kit MK-1517/UR) and Headset H-218/GR are required but not furnished with the equipment. For vehicular operation, Shock Mount MT-4034/U must be provided (also part of the MK-1517/UR).

1-9. Common Names

A list of nomenclature and common names for the major components of the radio set are given in table 1-1. The common names and reference designations of major assemblies within the receiver are shown in table 1-3

Table 1-1. Items Comprising an Operable Equipment

NSN	Item	Common name	Qty	Dimensions (in.)			Weight (lb)
				Length	Width	Height	
5820-00-013-8944	Receiving Set, Radio AN/URR-71 consisting of:	Radio set	1				
5820-00-013-9001	Receiver R-1518/UR	Receiver	1	9-5/8	7-1/8	5	11 max (less batteries)
5820-00-013-9005	Antenna AS-2887/UR	Antenna	1	39	.	.	
5820-00-763-3101	Field Pack CW-1005/UR	Field pack	1	13	8	5½	2½

Table 1-2. Technical Characteristics

Power requirements:	110 or 220 volt 50 to 400 Hz or 24 vdc external power or twelve BA-30/U type batteries for internal power. Maximum power consumption: 5.5 watts for ac, external; 3 watts for dc, external; 1.5 watts for internal battery.
Frequency range:	19.0 to 157.5 MHz in two continuous tuned bands; Band 1, 19.0 to 52.5 MHz; Band 2, 47.5 to 157.5 MHz.
Frequency stability:	±0.03%, zero to 5 minutes of operation at ambient temperature; ±0.01%, 5 minutes to 60 minutes of operation at ambient temperature. Temperature stability; ±0.5% over the temperature range of −40°F to +154°F.
Tuning rate:	Fast mode; 12 turns per band, continuous tune. Slow mode; approximately one-fortieth fast tuning rate.
Sensitivity (for 10 db $\frac{S+N}{N}$)	*Mode* — *Sensitivity* AM 1.2 microvolts, 30%, 1000 Hz amplitude modulated signal at 10 KHz bandwidth. CW 0.4 microvolts at 10 kHz bandwidth.
(for 20 db $\frac{S+N}{N}$)	FM 1.2-microvolt, 15-kHz deviated, 1000-Hz, frequency modulated signal at 75-kHz bandwidth.
Spurious responses:	*a.* Image rejection— at least 80-db suppression from 19 MHz to 52.5 MHz in band 1; 80 db at 47.5 MHz; 60 db at 102 MHz, and 50 db at 156 MHz in band 2. *b.* IF rejection—at least 80 db. *c.* Intermodulation; at least 66-db suppression, except in-band third order products, 60 db. *d.* Crossmodulation; separation of ±0.5 MHz, suppression at least 40 db; ±1.25 MHz, 60 db; ±3.75 MHz, 80 db.
IF frequency:	10.7 MHz.
IF bandwidth:	10 kHz or 75 kHz, selectable.
Audio output:	20 milliwatts minimum with 18 vdc internal supply, VOL control at maximum.
Audio response:	300 to 2,500 kHz, nominal.
Diode output:	2 volts or greater negative voltage across a 50,000 ohm load.
Calibration crystal frequency	2 MHz ±0.005%.
RF input:	2 switched antenna inputs: 1 is TNC-type, high inpedance, 2 is BNC-type, nominal 50 ohms.

Table 1-3. Common Names and Reference Designations

Common name	Reference designation
Radio assembly	A1A1
Control panel assembly	A1A1A1
Gear and Tuner assembly	A1A1A2
RF tunner assembly	A1A1A2A1
Tuner subassembly	A1A1A2A1A1
Circuit card motherboard	A1A1A2A1A1A1
Preselector board	A1A1A2A1A2
First RF amplifier	A1A1A2A1A3
Second RF amplifier	A1A1A2A1A4
Third RF amplifier	A1A1A2A1A5
Oscillator mixer	A1A1A2A1A6
IF amplifier assembly	A1A1A3
IF amplifier	A1A1A3A1
Detector assembly	A1A1A4
Detector	A1A1A4A1
Power supply assembly	A1A1A5
Power supply circuit card assembly	A1A1A5A1
Regulator	A1A1A5A2
Calibration oscillator assembly	A1A1A6
Calibration oscillator circuit card assembly	A1A1A6A1
Dust cover assembly	A1A2
Battery cover assembly	A1A2A1

CHAPTER 2

SERVICE UPON RECEIPT AND INSTALLATION

Section I. SITE AND SHELTER REQUIREMENTS

2-1. Siting

a. Portable or Vehicular Use. Ideal operating sites are often not available when the radio set is operated in a portable or vehicular configuration. However, when the tactical situation allows, make an effort to obtain the following operating conditions:

(1) Antenna clear of nearby obstructions.

(2) Site clear of electromagnetic radiation sources (high-tension lines, operating electric motors, etc).

(3) Good ground conditions available.

b. Fixed Installation. Consider the following general requirements when choosing a site for a fixed installation of the radio set:

(1) Ample clear space to install an antenna for the lowest operating frequency.

(2) Antenna site as high above surrounding terrain as possible.

(3) Good ground conditions available.

(4) Adequate shelter available for operators and equipment.

(5) 110 vac or 220 vac power available.

(6) Site clear of electromagnetic radiation sources (high-tension lines, operating electric motors, etc).

2-2. Shelter Requirements

The radio set is capable of operation in severe environments and requires no special shelter. However, use shelter, if available, to keep the equipment dry and free of dust. This will help reduce corrective maintenance requirements.

Section II. SERVICE UPON RECEIPT

2-3. Unpacking

Figure 2-1 shows typical packaging for the receiving set. Open top cover of outer carton, remove top pad and manual, and carefully remove receiving set from shipping container.

CHAPTER 2

SERVICE UPON RECEIPT AND INSTALLATION

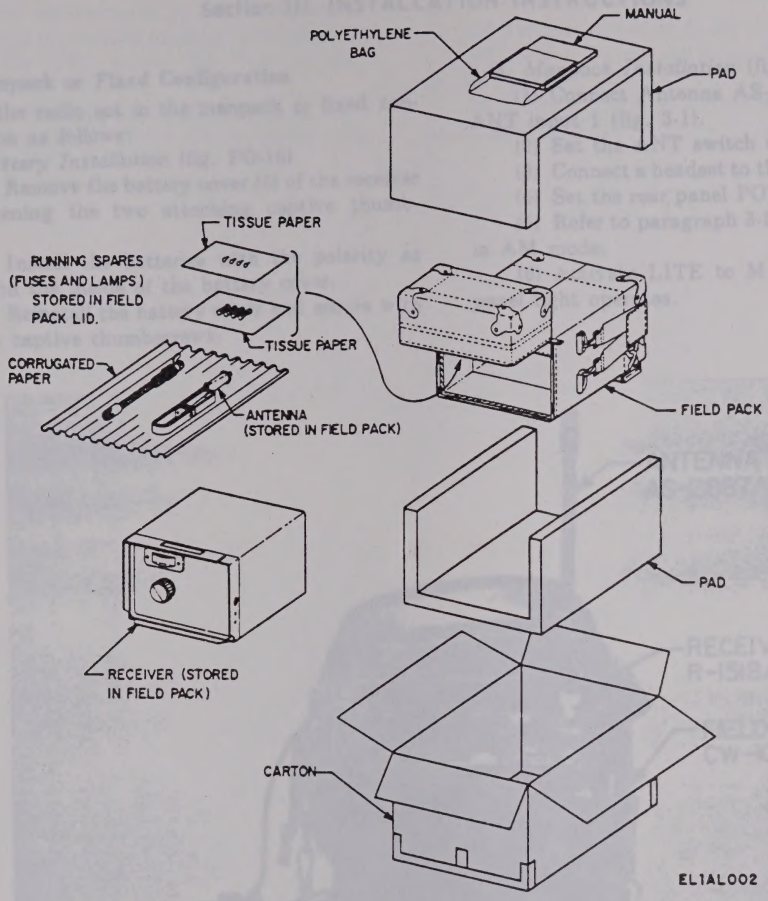

Figure 2-1. Typical packing diagram.

2-4. Checking Unpacked Equipment

a. Inspect the equipment for damage incurred during shipment. If the equipment has been damaged, report the damage on DD Form 6 (para 1-2).

b. Check the equipment against the component listing in table 1-1 and the packing slip to see if the shipment is complete. Report all discrepancies in accordance with paragraph 1-2. The equipment should be placed in service even though a minor assembly or part that does not affect proper functioning is missing.

c. Check to see whether the equipment has been modified. Equipment which has been modified will have the MWO number on the front panel, near the nomenclature plate. Check also to see whether all currently applicable MWOs have been applied. Current MWOs applicable to the equipment are listed in DA Pam 310-7.

d. See SB 700-20 for dimensions, weights, and volume of packaged items.

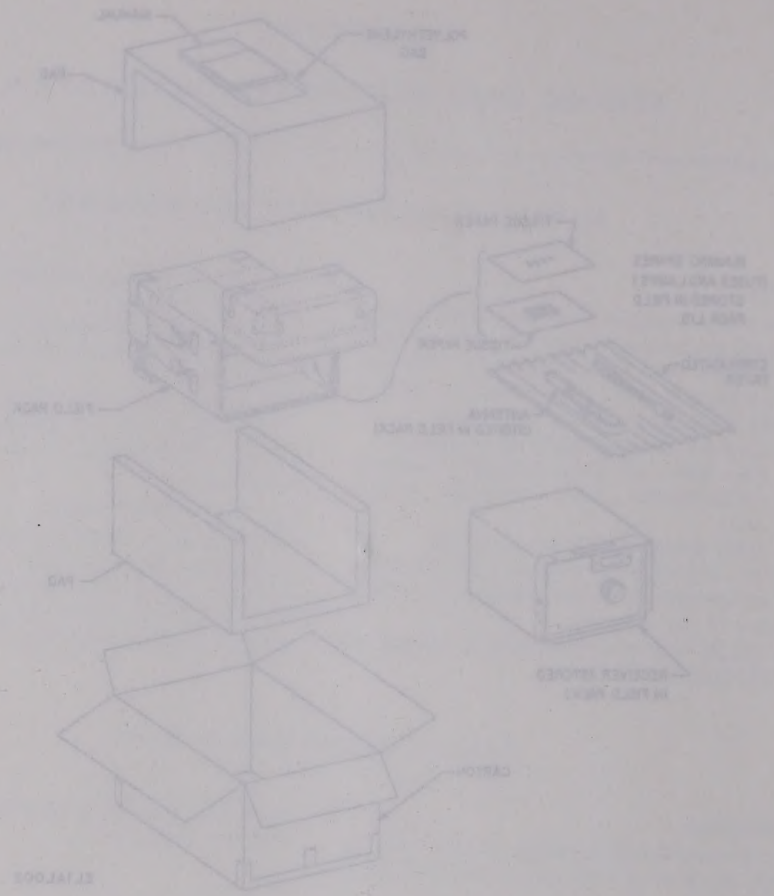

Section III. INSTALLATION INSTRUCTIONS

2-5. Manpack or Fixed Configuration

Install the radio set in the manpack or fixed configuration as follows:

a. Battery Installation (fig. FO-16).

(1) Remove the battery cover (5) of the receiver by loosening the two attaching captive thumbscrews.

(2) Install the batteries with the polarity as shown on the inside of the battery cover.

(3) Reinstall the battery cover and secure with the two captive thumbscrews.

b. Manpack Installation (fig. 2-2).

(1) Connect Antenna AS-2887/UR to receiver ANT input 1 (fig. 3-1).

(2) Set the ANT switch to 1.

(3) Connect a headset to the AUDIO connector.

(4) Set the rear panel POWER switch to INT.

(5) Refer to paragraph 3-5 and operate receiver in AM mode.

(6) Activate LITE to M ON and check that panel light operates.

Figure 2-2. Typical manpack installation.

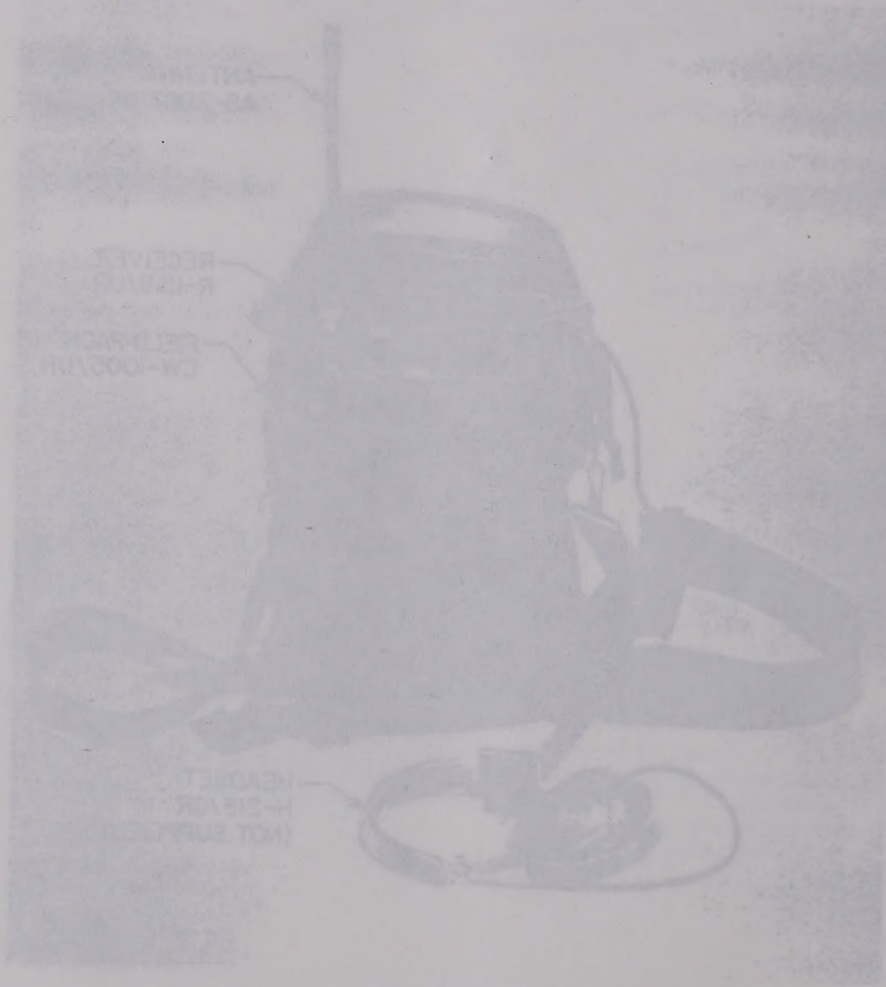

c. *Fixed Installation* (fig. 2-3).

(1) Extend handle/stand to stand position.

(2) Connect the desired antenna to the receiver.

(3) Set the ANT switch (fig. 3-1) to the desired input.

(4) Set the rear panel POWER switch to EXT.

(5) Connect the 110 vac or 220-vac power cable (parts of MX-1517/UR) to the POWER connector and to a suitable outlet.

(6) Connect a headset to the AUDIO connector.

(7) Refer to paragraph 3-5 and operate receiver in am. mode.

(8) Position LITE switch to ON and check that panel light operates.

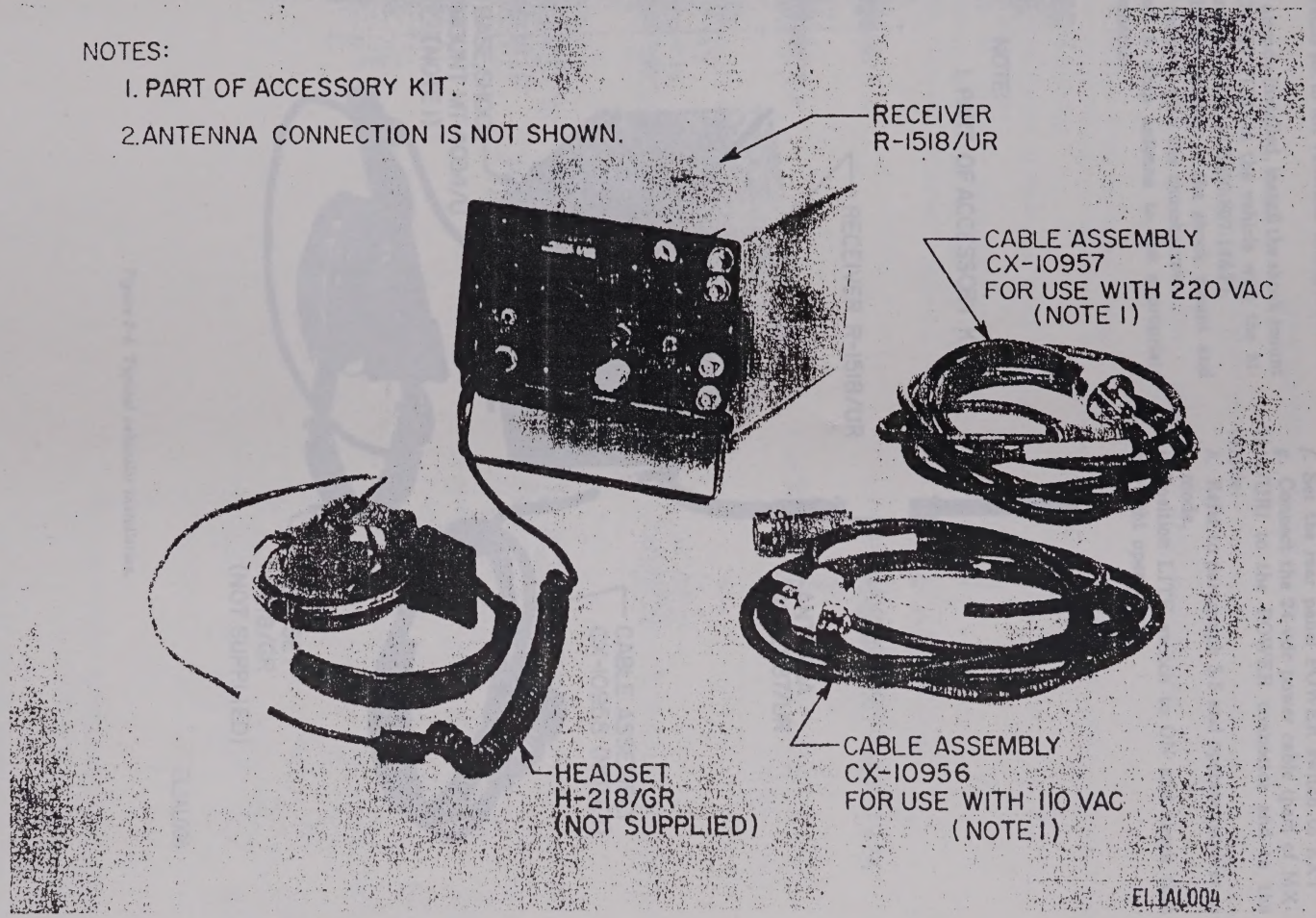

Figure 2-3. Typical fixed installation.

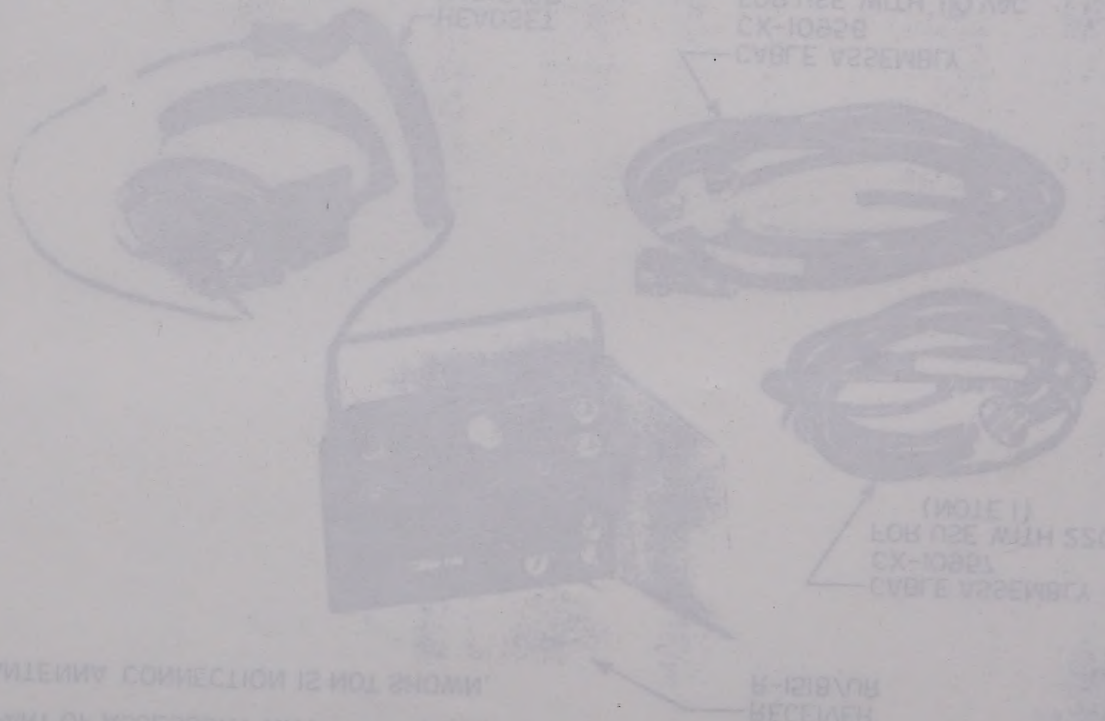

2-6. Vehicular Configuration (fig. 2-4)

Install the radio set in the vehicular configuration as follows:

a. If not already installed, install the shock mount (part of MX-1517/UR) in the vehicle with the attaching hardware (TM 11-5820-807-14&P).

b. Install the receiver in the shock mount and secure the receiver with the thumbscrew.

c. Connect a whip antenna to the appropriate receiver connector.

d. Set the ANT switch to the desired input.

e. Connect a headset to the AUDIO connector.

f. Set the rear panel POWER switch to EXT.

g. Connect the 24-vdc power cable (part of MX-1517/UR) to the POWER connector and to the vehicle.

h. Refer to paragraph 3-5 and operate receiver in AM mode.

i. Position LITE switch to ON and check that panel light operates.

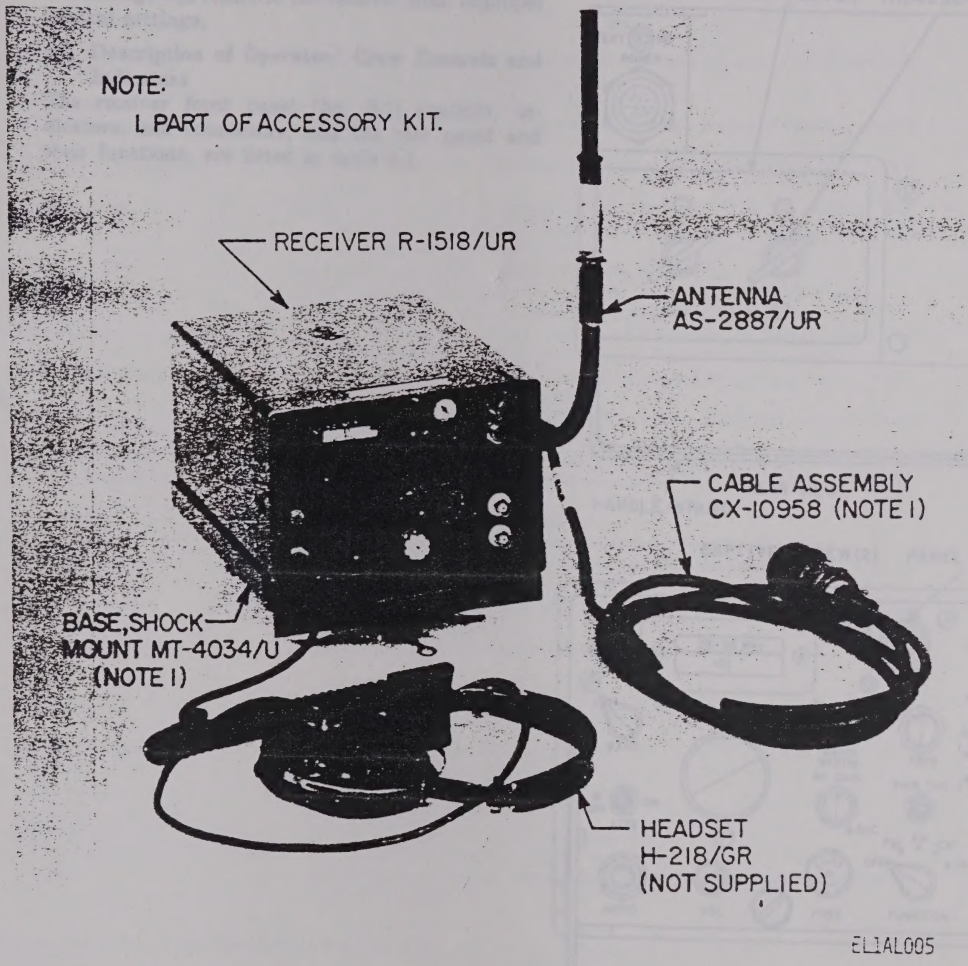

Figure 2-4. Typical vehicular installation.

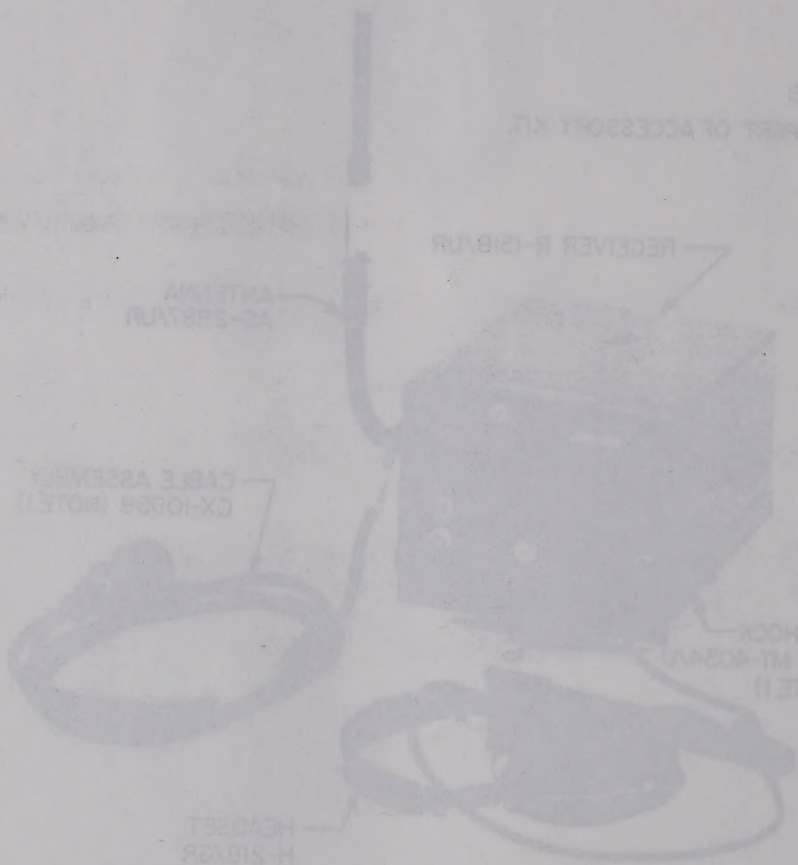

CHAPTER 3

OPERATING INSTRUCTIONS

Section I. CONTROLS AND INDICATORS

3-1. Damage From Improper Settings

No damage will result to the receiver from improper control settings.

3-2. Description of Operator/ Crew Controls and Indicators

The receiver front panel (fig. 3-1) controls, indicators, and connectors, and the rear panel and their functions, are listed in table 3-1.

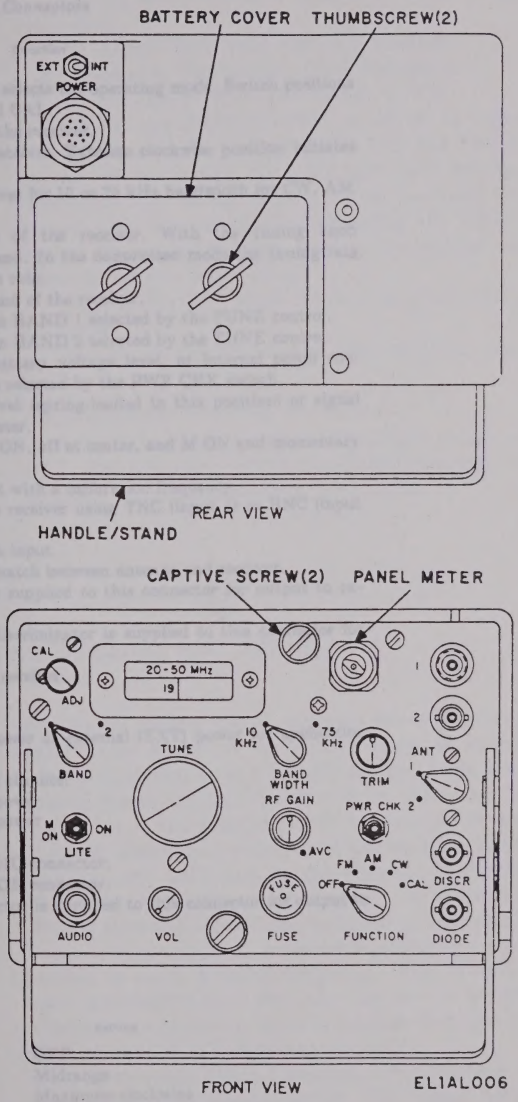

Figure 3-1. Controls, indicators, and connectors.

CHAPTER 3

OPERATING INSTRUCTIONS

Section I. CONTROLS AND INDICATORS

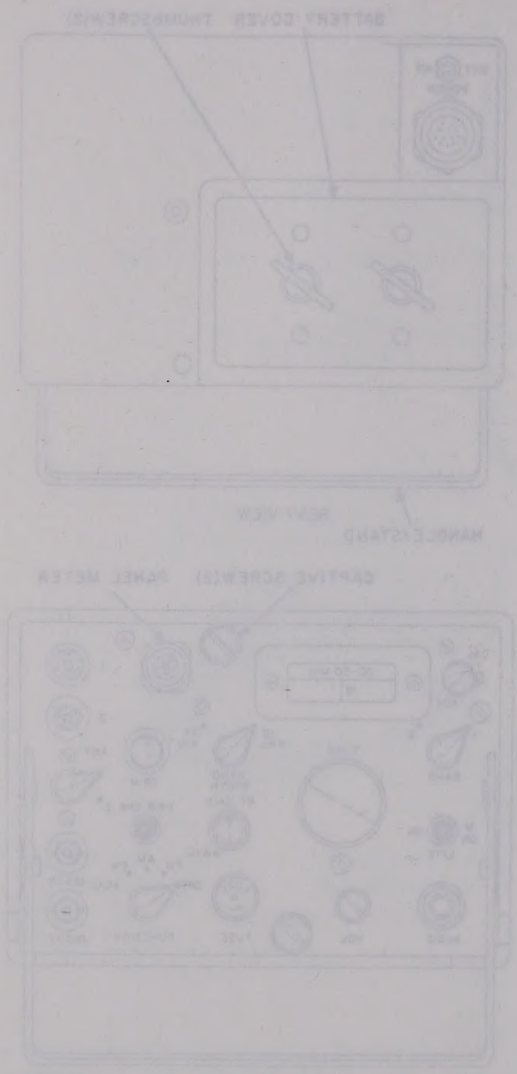

Section II. OPERATION UNDER USUAL CONDITIONS

3-3. Preliminary Starting Procedures

Perform the preliminary operations listed below before starting the equipment as outlined in detail in paragraph 3-5.

a. Install the batteries and connect the equipment in the desired configuration (para 2-5 and 2-6).

b. Press the PWR CHK switch and read the battery voltage on the panel meter. Release the switch. If the meter reading was in the REPLACE (red) range, replace the batteries (para 2-5).

Table 3-1. Controls, Indicators, and Connectors

Front panel	Function
FUNCTION switch	Applies power to the receiver and selects the operating mode. Switch positions include OFF, FM, AM, CW, and CAL.
VOL control	Controls the audio output level of the receiver.
RF GAIN control	Controls the overall gain of the receiver. Extreme clockwise position initiates AGC operation.
BANDWIDTH control	Sets the if. bandwidth of the receiver for 10 or 75 kHz bandwidth for CW, AM and FM.
TUNE control	Selects the operating frequency of the receiver. With the tuning knob depressed, 12 turns scan the band. In the nonpressed mode the tuning rate is approximately 1/40th the scan rate.
BAND switch	Selects the operating frequency band of the receiver.
20-50 MHz	Displays the receiver tuning within BAND 1 selected by the TUNE control.
50-150 MHz	Displays the receiver tuning within BAND 2 selected by the TUNE control.
Panel meter	Displays received signal level, battery voltage level, or internal power converter output voltage level, as selected by the PWR CHK switch.
PWR CHK switch	Selects the equipment voltage level (spring-loaded in this position) or signal level for display on the panel meter.
LITE switch	Controls dial light with positions ON, off at center, and M ON and momentary on (spring-loaded) position.
CAL ADJ control	Used to shift the cursor to align it with a calibration frequency.
ANT connectors	Used to couple an antenna to the receiver using TNC (input 1) or BNC (input 2) connectors.
ANT switch	Used to select the desired antenna input.
TRIM control	Used to optimize the impedance match between antenna and receiver.
DIODE connector	DC voltage from the detector is supplied to this connector for output to external equipment.
DISCR connector	Detected voltage from the FM discriminator is supplied to this connector for output to external equipment.
AUDIO connector	Used to connect a headset to the receiver.
Rear panel	
Power switch	Selects internal (INT) battery power or external (EXT) power for application to the receiver.
POWER connector	Provides connection for following circuits:
110 vac	110 volts, 50 to 400 Hz input power
220 vac	220 volts, 50 to 400 Hz input power
24 vdc	24 volts dc input power
Audio output	Same output signal as at AUDIO connector.
Diode output	Same output signal as at DIODE connector.
AGC	DC voltage from the agc detector is supplied to this connector for output to external equipment.

c. Set the controls on the front of the receiver (fig. 3-1) as follows:

Control	Setting
FUNCTION switch	OFF
VOL control	Midrange
RF GAIN control	Maximum clockwise
BAND switch	Desired band
TUNE control	Desired frequency
LITE switch	OFF
BANDWIDTH switch	75 kHz
ANT switch	Desired antenna

d. Set the controls on all ancillary equipment to the preliminary settings listed in the applicable technical manual.

3-4. Initial Adjustments

No initial adjustments of the radio set are necessary. However, when ancillary equipment is used with the radio set, this equipment may require initial adjustment. Refer to the applicable technical manuals for initial adjustment of this equipment.

3-5. Operating Procedures

a. Equipment Starting. With the controls set as described in paragraph 3-3, perform the following procedures:

(1) Start the receiver by setting the FUNCTION switch to the desired operating mode.

(2) Start ancillary equipment per applicable technical manuals.

b. Continuous Wave Reception (Cw).

(1) Set the FUNCTION switch to CW.

(2) Set the BANDWIDTH switch to 10 kHz.

(3) Tune in the desired signal with the TUNE control. Press tuning knob for fast scan tuning, release for fine tuning. Once a signal has been obtained, trim the antenna by adjusting the TRIM control for maximum signal level to the receiver, as observed on the panel meter.

(4) If the level of the incoming signal is stable, set the VOL control to about 3/4 clockwise and adjust the audio level using the RF GAIN control.

(5) If the level of the signal is varying, set the RF GAIN control to AGC (fully clockwise) and adjust the audio level using the VOL control.

c. Amplitude Modulation (AM) Reception.

(1) Set the FUNCTION SWITCH TO AM.

(2) Set the BANDWIDTH switch to 10 kHz.

(3) Tune in the desired signal with the TUNE control. Press tuning knob for fast scan tuning, release for fine tuning. Once a signal has been obtained, trim the antenna by adjusting the TRIM control for maximum signal level to the receiver, as observed on the panel meter.

(4) Set the RF GAIN control to AGC (fully clockwise).

(5) Adjust level with the VOL control.

d. Frequency Modulation (FM) Reception.

(1) Set the FUNCTION switch to FM.

(2) Set the BANDWIDTH switch to 75 kHz.

(3) Tune in the desired signal with the TUNE control. Press tuning knob for fast scan tuning, release for fine tuning. Once a signal has been obtained, trim the antenna by adjusting the TRIM control for maximum signal level to the receiver, as observed on the panel meter.

(4) Set the RF GAIN control to AGC (fully clockwise).

(5) Adjust the audio level with the VOL control.

3-6. Equipment Stopping Procedure

To stop the receiver, set the FUNCTION switch to OFF. Refer to the applicable technical manuals for ancillary equipment stopping procedures.

Section III. OPERATION UNDER UNUSUAL CONDITIONS

3-7. Operation Under Emergency Conditions

a. Operation on Low Batteries. To conserve batteries, set the LITE switch to its center (off) position.

b. Operation with Random-Length Antennas. In an emergency, the radio set can be operatied using practically any random length of wire as an antenna. Connect the random-length antenna to either antenna input and trim for optimum impedance match by tuning an input signal and adjusting the TRIM control for maximum signal to the receiver, as observed on the panel meter.

3-8. Recognition and Identification of Jamming

Under real or simulated tactical conditions the receiver can be jammed by the enemy. Enemy jamming is done by transmitting a strong signal on the same frequency as that used by the receiver for communication, making it difficult or impossible to receive the desired signal. Unusual noises or strong interference heard on the receiver may be enemy amming, signals from a friendly station, noise from local source, or the receiver may be defective. To etermine if the interference is originating in the ceiver, disconnect and remove the antenna leads, short the ANT post to the chassis. If the interference continues, the receiver is defective. Enemy jamming signals may be typed as continuous wave or modulated. A jamming signal may be intended to block a single frequency. This is called spot jamming. The enemy may use one or several transmitters to jam or block a band of frequencies. This method is called barrage jamming.

a. Continuous-Wave Jamming. CW jamming is transmitted as a steady carrier. This signal beats with another signal and produces a steady tone in the headset. CW jamming signals may also be keyed

by using a random on-and-off signal or using actual code characters keyed to the same rate or a little faster than the signal being received.

b. Modulated Jamming. Modulated jamming signals may consist of noise, laughter, singing, music, various tones, or most any unusual sound, or it may be a combination of these sounds. Various types of modulated jamming signals are explained below.

(1) *Spark.* This is one of the simplest, most effective, and most easily produced jamming signals. This type of signal sounds very rough, raspy, and sometimes like an operating electric motor with sparking brushes. The signal is very broad; therefore it will interfere with a large number of communication channels.

(2) *Sweep-through.* This signal is the result of sweeping or moving a carrier back and forth across your frequency at a slow or rapid rate. The numerous signals of varying amplitude and frequency produce a sound like that of a low-flying airplane passing overhead. This type of jamming is effective over a broad range of frequencies. When it is varied rapidly, it is effective against all types of voice signals.

(3) *Stepped tones or bagpipes.* This signal usually consists of several separate tones. The tones are transmitted in the order of first increasing and then decreasing pitch, repeated over and over. The audible effect is like the sound of a Scottish bagpipe.

(4) *Noise.* Noise is random both in amplitude and frequency. It produces a sound similar to that heard when a receiver is not tuned to a station and the VOL control is turned to maximum.

(5) *Gulls.* This signal consists of a quick rise and a low fall of a variable audio frequency. The sound is similar to the cry of the sea gull.

(6) *Tone.* This signal consists of a single audio frequency of unvarying tone. It produces a steady howl in the headset. Another use of tone is to vary it slowly. This produces a howling sound of varying pitch.

3-9. Antijamming Procedures

When it is determined that the incoming signal is being jammed, notify the immediate superior officer and continue to operate the equipment. To provide maximum intelligibility of jammed signals, follow one or more of the operational procedures below. If these procedures do not provide sufficient signal separation for satisfactory operation, change to an alternate frequency.

a. Operate the receiver as outlined in paragraph 3-5.

b. Detune the tuning control several degrees on either side of the desired signal. This may cause some separation of the desired signal and the jamming signal.

c. Set the BANDWIDTH control to the narrowest bandwidth which will allow reception of the desired signal.

d. Vary the RF GAIN control. This may reduce the jamming signal enough to permit the weaker desired signal to be heard.

e. Use CW mode. This mode is less susceptible to jamming.

f. If two antennas are connected to the receiver, switch from one to the other to obtain best reception.

Section IV. PREPARATION FOR MOVEMENT

3-10. Manpack or Fixed Configuration

a. Manpack Configuration. The manpack configuration of the radio set may be transported while assembled if further use is anticipated. However, if the equipment will not be used immediately at the new location, it should be disassembled as follows:

(1) Set the FUNCTION switch to OFF.

(2) Disconnect the antenna from the ANT connector.

(3) Disconnect the headset from the AUDIO connector.

(4) Remove the battery cover of the receiver by loosening the two captive thumbscrews.

(5) Remove the batteries from the receiver.

(6) Reinstall the battery cover and secure with the two captive thumbscrews.

b. Fixed Configuration. Disassemble the fixed configuration as follows:

(1) Set the FUNCTION switch to OFF.

(2) Disconnect the 110 vac or 220 vac power cable from the POWER connector and from the power outlet.

(3) Disconnect the antenna(s) from the ANT connector(s).

(4) Disconnect the headset from the AUDIO connector.

NOTE

Perform the following steps only if batteries are installed in the receiver.

(5) Remove the battery cover of the receiver by loosening the two captive thumbscrews.

(6) Remove the batteries from the receiver.

(7) Reinstall the battery cover and secure with the two captive thumbscrews.

3-11. Vehicular Configuration

The vehicular configuration is not normally disassembled for movement unless no further use of the radio set is anticipated. If the radio set will not be used immediately at the new location, or if it will be installed in a different vehicle, disassemble the equipment as follows:

a. Set the FUNCTION switch to OFF.

b. Disconnect the 24 vdc power cable from the POWER connector and from the vehicle power connector.

c. Disconnect the antenna(s) from the ANT connector(s).

d. Disconnect the headset from the AUDIO connector.

e. Loosen the thumbscrews on the vehicle mount and remove the receiver from the mount.

f. Remove the vehicle mount by removing the attaching hardware.

NOTE

Perform the following steps only if batteries are installed in the receiver.

g. Remove the battery cover of the receiver by loosening the two captive thumbscrews.

h. Remove the batteries from the receiver.

i. Reinstall the battery cover and secure with the two captive thumbscrews.

CHAPTER 4

MAINTENANCE

Section I. GENERAL

4-1. Scope of Maintenance

This chapter describes the operator and organizational maintenance requirements for Radio Set AN/URR-71. These requirements include preventive maintenance, troubleshooting, adjustment, removal, cleaning, inspection, repainting and refinishing, installation, and testing.

4-2. Maintenance Duties

Operator maintenance of the radio set is limited to visual inspection, operational testing, external cleaning, and minor retouching of paint. Organizational maintenance includes all of the preventive and corrective maintenance duties described in this chapter.

4-3. Tools and Equipment

All tools and equipment required for operator and organizational maintenance are listed in the Maintenance Allocation Chart (appx B).

Section II. OPERATOR/CREW MAINTENANCE

4-4. Operator Crew Preventive Maintenance

NOTE

Refer to TM 750-244-2 for proper procedures for destruction of this equipment to prevent enemy use.

a. Operator/crew preventive maintenance is the systematic care, servicing and inspection of equipment to prevent the occurrence of trouble, to reduce downtime, and to maintain equipment in serviceable condition. To be sure that your receiver is always ready for your mission, you must do scheduled preventive maintenance checks and services (PMCS).

(1) BEFORE OPERATION, perform your PMCS to be sure that your equipment is ready to go.

(2) DURING OPERATION, perform your D PMCS. This should help you to spot small troubles before they become big problems.

(3) When an item of equipment is reinstalled after removal, for any reason, perform the necessary PMCS (table 4-1) to be sure the item meets the readiness reporting criteria.

(4) Use the ITEM NO. column in the PMCS table to get the number to be used in the TM ITEM NO. column on DA Form 2404 (Equipment Inspection and Maintenance Worksheet) when you fill out the form.

b. Routine checks like CLEANING, PRESERVATION, DUSTING, WASHING, CHECKING FOR FRAYED CABLES, STOWING ITEMS NOT IN USE, COVERING UNUSED RECEPTACLES, CHECKING FOR LOOSE NUTS AND BOLTS AND CHECKING FOR COMPLETENESS are not listed as PMCS checks. They are things that you should do any time you see they must be done. If you find a routine check like one of those listed in your PMCS, it is because other operators reported problems with this item.

WARNINGS

Adequate ventilation should be provided while using TRICHLOROTRIFLUOROETHANE. Prolonged breathing of vapor should be avoided. The solvent should not be used near heat or open flame; the products of decomposition are toxic and irritating. Since TRICHLOROTRIFLUOROETHANE dissolves natural oils, prolonged contact with skin should be avoided. When necessary, use gloves which the solvent cannot penetrate. If the solvent is taken internally, consult a physician immediately.

NOTES

The PROCEDURES column in your PMCS charts instruct how to perform the required checks and services. Carefully follow these instructions and, if tools are needed, get organizational maintenance to do the necessary work.

4-5. Operator/Crew Preventive Maintenance Checks and Services

NOTE

The PMCS are to be performed in the order listed.

Table 4-1. Operator/Crew Preventive Maintenance Checks and Services Chart

B — Before D — During

Item No.	Interval B	Interval D	Item to be Inspected	Procedures — Check for and have repaired or adjusted as necessary.	Equipment is Not Ready/Available If:
1	•		Mission Essential Equipment	Check for completeness and satisfactory condition of the equipment. Report missing items.	Available equipment is insufficient to support the combat mission.
2	*		Battery Check	Check batteries for full charge (Use Control Panel meter). Replace bad batteries.	Batteries are bad.
3		•	Operational Check	Perform operational check as described in paragraph 4-8.	Equipment fails to operate satisfactorily.

*Do this check before each deployment to a mission location. This will permit any existing problems to be corrected before the mission starts. The check does not need to be done again until redeployment.

Paragraph 4-6 deleted.

4-7. Repainting and Refinishing

a. Refer to SB 11-573 to determine the proper finish to use.

b. Refer to TB 43-0118 for refinishing procedures.

c. Do *not* paint connectors, controls, frequency MHz windows, or panel meter face.

4-8. Operational Checks

a. Install the batteries in the receiver (para 2-5*a*).

b. Install the radio set in the manpack configuration (para 2-5*b*).

c. Operate the radio set in each operating mode on each band at an assigned frequency. Verify that satisfactory reception is possible on each assigned frequency.

d. Install the radio set in the fixed configuration (para 2-5*c*). (If available, install antennas to both ANT inputs.)

e. Repeat *c* above. Test operation using both antennas, if installed.

f. Install the radio set in the vehicular configuration (para 2-6).

g. Repeat *c* above.

h. Shut down the equipment (para 3-6).

i. Unless further operation is anticipated, disassemble the vehicular configuration (para 3-11).

Section III. TROUBLESHOOTING

4-9. General

When an equipment malfunction occurs, the information in this section will aid in isolating the trouble to a defective unit or item of equipment. The defective equipment may then be forwarded to a higher category of maintenance.

4-10. Troubleshooting Chart

Troubleshooting of the radio set is accomplished in conjunction with the operational checks (para 4-8) and preventive maintenance checks listed in table 4-1. When an abnormal condition or result is observed, locate the appropriate trouble symptom in tables 4-2 and 4-3. The procedure listed in the corrective action column should then correct the trouble. Refer any trouble that is beyond the scope of operator and organizational maintenance to a higher category of maintenance.

Table 4-2. Operator's Troubleshooting

Item	Trouble symptom	Probable trouble	Checks and corrective action
1	Receiver completely inoperative.	*a.* Fuse.	*a.* Replace fuse.
		b. POWER switch not in proper position for source.	*b.* Check position of POWER switch for proper position.
		c. Defective source voltage.	*c.* Replace if defective.
		d. Defective power plug.	*d.* Check plug for damage. Refer to a higher category of maintenance for repair.
2	Low signal power (weak audio output).	*a.* Antenna in wrong area.	*a.* Move antenna.
		b. RF gain or VOL control out of adjustment.	*b.* Readjust controls.
		c. Damaged antenna connection.	*c.* Check antenna for damage, tighten, or replace. Refer to higher category of maintenance for repair.
		d. Weak batteries (when used).	*d.* Check and replace if required.
3	Static or noise in receiver.	*a.* Enemy jamming.	*a.* See paragraph 3-9.
		b. Loose antenna connection.	*b.* Tighten connection.
4	Panel lamp inoperative.	Defective panel lamp.	Refer to higher category of maintenance for replacement.
5	Signals weak or fading rapidly.	Improper setting of RF gain control.	Set RF gain control to AVC.

Table 4-3. Organizational Troubleshooting

Malfunction	Probable cause	Corrective action
Radio set inoperative from internal batteries.	*a.* Batteries defective.	*a.* Replace batteries (para 2-5*a*).
	b. Receiver defective.	*b.* Replace receiver.
Radio set inoperative from 110 vac power.	*a.* Blown fuse.	*a.* Replace fuse (para 4-13).
	b. 110 vac power cable defective.	*b.* Replace cable. Forward defective cable to higher category maintenance.
	c. Receiver defective.	*c.* Replace receiver.
Radio set inoperative from 220 vac power.	*a.* Blown fuse.	*a.* Replace fuse (para 4-13).
	b. 220 vac power cable defective.	*b.* Replace cable. Forward defective cable to higher category maintenance.
	c. Receiver defective.	*c.* Replace receiver.
Radio set inoperative from 24 vdc power.	*a.* Blown fuse.	*a.* Replace fuse (para 4-13).
	b. 24 vdc power cable defective.	*b.* Replace cable. Forward defective cable to higher category maintenance.
	c. Receiver defective.	*c.* Replace receiver.
Only noise heard in headset (no signals received).	*a.* Antenna defective.	*a.* Replace antenna.
	b. Receiver defective.	*b.* Replace receiver.
Receiver audio weak or garbled (all modes and frequencies).	*a.* Headset defective.	*a.* Replace headset.
	b. Antenna defective.	*b.* Replace antenna.
	c. Receiver defective.	*c.* Replace receiver.
Dial light or panel meter inoperative.	Receiver defective.	Replace receiver.

Section IV. ORGANIZATIONAL MAINTENANCE

4-11. Organizational Preventive Maintenance Checks and Services

Organizational preventive maintenance procedures are designed to help maintain equipment in serviceable condition. They include items to be checked and how to check them. These checks and services, described in table 4-4, outline inspections that are to be made at specific monthly intervals.

Table 4-4. Organizational Preventive Maintenance Checks and Services Chart

M — Monthly

Item No.	Interval M	Item to be Inspected	Procedures
1	•	Radio Receiving Set AN/URR-71	Perform operational checks and troubleshooting procedures as described in paragraphs 4-8 and 4-10.

4-12. Equipment Removal and Installation

a. When the equipment is used in the backpack or fixed configuration, disassemble the receiver as outlined in paragraph 3-10. When the equipment is used in a vehicular configuration follow the procedures outlined in paragraph 3-11.

b. To install the equipment after maintenance has been performed, follow the procedures outlined for the backpack or fixed configuration (para 2-5), or for the vehicular configuration (para 2-6).

4-13. Receiver Parts Removal and Replacement

a. General. Maintenance and repair of the receiver at the organizational level is limited to the replacement of batteries, knobs, and fuses.

b. Fuse Replacement. Replace the front panel fuse as follows:

NOTE

A spare fuse (stored in the field pack) is provided to allow the receiver to be placed back in service quickly after a fuse blows. If a spare fuse is installed in the receiver, restock a new 1/8-ampere fuse in the field pack as soon as the operational or tactical situation allows.

(1) Set the FUNCTION switch to OFF.

(2) Disconnect the external power cable (if connected).

(3) Remove the cap from the fuseholder by turning counterclockwise.

CAUTION

Do not replace the fuse with one of a higher rating. Use a 1/8-ampere fuse as specified in the Repair Parts and Special Tools List.

(4) Remove the fuse from the cap and replace it with the new fuse.

(5) Install the cap on the fuseholder and tighten by turning clockwise.

c. Antenna Repair. Unscrew leaf assembly (4, fig. 1-1) from antenna base and replace with a serviceable part.

4-14. Maintenance of Ancillary Items

a. External Power Cables. Maintenance of items in the accessory kit is covered in TM 11-5820-807-14&P. The 110 vac, 220 vac, and 24 vdc power cables are not repairable at the organizational maintenance category. Forward damaged or defective cables to higher category of maintenance for repair.

b. Other Ancillary Items. Organizational maintenance of other ancillary items (headset, etc) are covered in separate technical manuals.

CHAPTER 5

FUNCTIONING OF EQUIPMENT

Section I. UNIT FUNCTIONING

5-1. General

This section covers the basic functioning of Radio Receiver R-1518/UR. Functioning details for the gear and tuner assembly, the AM receiver subsystem integrated circuit, and the FM receiver subsystem integrated circuit are given in sections II, III, and IV of this chapter. The information in these sections may be used as a troubleshooting aid to isolate a fault to a specific subassembly. Section V covers the functioning of the dust cover.

5-2. Block Diagram Analysis

(fig. FO-1)

a. General. The received RF signal (19 to 157.5 MHz) enters the receiver through the high impedance (1) or 50 ohm (2) antenna connector on the front panel. The signal passes through the antenna trimmer into the gear and tuner assembly where it is bandwidth limited, amplified and mixed with the output of the local oscillator to produce the 10.7 MHz IF signal. The signal flows through the IF assembly where it is filtered and amplified and passed on the the detector assembly. The detector assembly demodulates the signal and amplifies the resultant audio to furnish the audio output of the receiver. The detector assembly also provides diode output and the agc voltage for controlling the gain in the IF amplifier and RF tuner. Basically, the receiver is composed of five blocks of circuits which are the gear and tuner assembly (A2), calibration oscillator (A6), IF assembly (A3), detector assembly (A4), and power supply (A5). Each of these circuits is described in the following subparagraphs.

b. Gear and Tuner Assembly (A2). The gear and tuner assembly is composed of the following subassemblies which are, in signal flow order, the preselector, first RF amplifier, second RF amplifier, third RF amplifier, and oscillator-mixer.

(1) The preselector is composed of a tunable bandpass filter and is used to provide a portion of the receiver selectivity and to provide the proper impedance match for the first RF amplifier, thereby contributing to the selectivity of the receiver. The RF amplifiers are tunable amplifiers. The gain of the first and second RF amplifiers is controlled by the agc voltage developed in the detector assembly or by the RF gain control on the receiver front panel. The third RF amplifier has a fixed gain.

(2) The output of the third RF amplifier is routed to the oscillator-mixer subassembly where it is mixed with the local oscillator to produce the 10.7 MHz IF output that is routed to the IF assembly.

(3) Due to the complexity of the band switching arrangement and the mechanical configuration, further details of the gear and tuner assembly are given in paragraphs 5-3 through 5-6.

c. Calibration Oscillator (A6). The calibration oscillator is composed of a 2 MHz crystal controlled oscillator of conventional design and a differentiation network. The output of the oscillator is routed to the differentiation network which produces an impulse. The impulse contains all of the 2 MHz harmonics from 20 to 156 MHz. This spectrum is routed to the input of the gear and tuner assembly and is used as reference frequencies for calibrating the receiver dial.

d. IF Assembly (A3). The IF assembly consists of a 3-db impedance matching pad, two selectable crystal filters, two stages of amplification, and an agc amplifier. The output of the oscillator-mixer subassembly in the gear and tuner assembly is routed through the impedance matching pad to one of the 10.7 MHz crystal filters. The crystal filters are selectable from the receiver front panel bandwidth switch. The 6-db bandwidths of the filters are 10 kHz and 75 kHz. The filter rejects all of the mixer products except the desired 10.7 MHz IF signal. The first and second IF amplifier stages are tuned amplifiers with a nominal voltage gain of 60 db whose gain is controlled by the agc amplifier. The agc amplifier is an inverting dc amplifier that converts the agc voltage from the detector, or the voltage from the receiver front panel RF gain control, to the proper polarity for controlling the gain of the IF amplifiers.

e. Detector Assembly (A4). The detector assembly contains a third stage of IF amplification, a multipurpose am. receiver subsystem integrated circuit, an FM receiver subsystem integrated circuit, bfo, product detector, meter amplifier, and an audio amplifier.

CHAPTER 5

FUNCTIONING OF EQUIPMENT

(1) The IF amplifier stage is similar to those in the IF assembly except it has a fixed voltage gain of approximately 20 db. The AM receiver subsystem operates in all receiver modes and provides the following functions: AM detector, diode output amplifier, agc detector and amplifier, and audio-preamplifier. Due to the many functions contained within the am. receiver subsystem, additional details are given in paragraphs 5-7 and 5-8.

(2) The beat frequency oscillator (bfo) and product detector are energized only when the receiver front panel FUNCTION switch is in the CW or CAL modes. The bfo operates on a crystal controlled frequency of 10.7 MHz. The output of the bfo is routed to the product detector where the CW signal is demodulated and routed to the audio preamplifier in the AM receiver subsystems.

(3) The FM receiver subsystem integrated circuit is energized only when the receiver front panel FUNCTION switch is in the FM mode. The FM receiver subsystem incorporates a limiter and an FM detector. It provides the detected FM audio which is routed to the audio preamplifier in the AM receiver subsystem integrated circuit, and the discriminator output of the receiver. Further details on the various functions contained in the fm receiver subsystem integrated circuit are given in paragraphs 5-9 and 5-10.

(4) The agc output from the AM receiver subsystem is also used to drive the meter amplifier which produces a current that is proportional to the RF input to the receiver. The output of the meter amplifier is used to drive the front panel signal strength meter.

(5) The output from the audio preamplifier in the AM receiver subsystem is routed to the audio amplifier which produces the necessary audio power output of the receiver. The audio amplifier consists of a bandpass filter and an amplifier. The amplifier has a fixed voltage gain of approximately 20 db and a 6-db bandwidth of 2.5 to 3.5 kHz.

f. Power Supply (A5). The power supply consists basically of a rectifier and filter, a +18-volt pre-regulator, and a +11.2-volt regulator. A power transformer external to the power supply assembly is used to supply the proper voltage to the power supply when operating from an ac source with any frequency between 50 and 400 Hz. The primary of the transformer can be connected for either 110 or 220 vac operation. This is accomplished by jumpers in the power cable which is connected to the rear panel POWER connector of the receiver. In addition to ac operation, the power supply can also operate from a nominal +24-volt vehicular power source, or from an internal battery by means of the INT-EXT switch on the rear panel of the receiver. The rectifier and filter circuits consist of a bridge rectifier and capacitive filter and is used only during ac operation. The +18 volt preregulator circuit is a conventional zener diode, series pass transistor arrangement and is used to supply power to nonvoltage sensitive circuits of the receiver, and to limit the input voltage to the +11.2-volt regulator. The +11.2-volt regulator is a precision integrated circuit regulator which is short circuit protected and is used to supply power to all voltage sensitive circuits in the receiver.

Section II. GEAR AND TUNER ASSEMBLY

5-3. General

(fig. FO-4)

The tuner assembly is contained in a metal box that is divided into five compartments. The compartments are used to provide isolation between the subassemblies contained in each compartment. The motherboard forms one side of the tuner box and is used to provide interconnections among the subassemblies. The main tuning inductor is also connected to the motherboard side of the tuner box. The variable inductor contains five sections; each section located directly opposite the subassembly with which it is electrically associated.

a. There are five subassemblies, one per compartment, within the tuner; the preselector, first RF amplifier, second RF amplifier, third RF amplifier, and the oscillator-mixer. Each subassembly is explained in the following paragraphs.

b. The simplified schematic diagram, figure FO-4, is shown in the band 1 position. Interconnections from the motherboard to the various subassemblies are not shown except for the pertinent signal path from one subassembly to the next. Switches S1 and S2 of each subassembly form the band switch. These switches are magnetically operated reed switches. The switches are activated by a shaft containing five magnets that is connected to the detent mechanism of the front panel band switch. The magnets and switches are positioned such that one magnet is used to activate both switches on each subassembly. For simplicity, the mechanical relationship among the switches is not shown on the simplified schematic diagram.

5-4. Preselector

The preselector subassembly is composed of a two

TM 11-5820-770-14

pole, tunable bandbass filter. Tuning is provided by section L1-E of the main tuning inductor. Capacitor C11 and resistor R1 form a slope correction network to compensate for changes in gain throughout the frequency range. Capacitor C3 is a temperature compensating capacitor. The capacitive divider output network consisting of capacitors C9, C10, and C11 is selected to provide the best sensitivity consistent with the signal handling requirements of the receiver. The receiver is capable of handling a 0.5 volt signal without blocking, therefore the capacitive divider output cannot be too high or the first RF amplifier will limit. The output of the preselector is coupled to the first RF amplifier by inductor L4. The interstage coupling coils, L4, L3, L2, and L1, serve as high frequency chokes, thus eliminating any possibility of UHF oscillations due to the very high frequency response of the transistors used in the rf amplifier stages.

5-5. RF Amplifiers

a. The three RF amplifiers are the same except for the agc circuit. The third stage is operated as a fixed gain stage with no agc. Transistor Q1 in each stage is a dual insulated gate field effect transistor. Gate 2 is used for the agc input. Due to the inherent gain versus gate 2 voltage characteristic, the agc of the first and second rf amplifiers are delayed relative to the IF amplifiers. In addition, resistor R8 of the second RF amplifier provides a slight delay in the agc action of the second RF amplifier relative to the first RF amplifier. This is necessary in order to accommodate the large dynamic range of input signals to the receiver, up to 0.5 volts. The total agc range in the RF amplifiers exceeds 60 db.

b. When operating in the band 1 position, switches S1 and S2 closed as shown in figure FO-4. Coils L4 and resistors R6 of the first and second RF amplifiers, and coil L4 and resistor R7 of the third RF amplifier, form slope correction networks. These networks tend to stabilize the gain of the amplifiers throughout the band 1 frequency range. With the band switch in the band 2 position, switches S2 and S2 open, capacitors C12 and resistors R7 of the first and second RF amplifiers and capacitor C12 and resistor R8 of the third RF amplifier, form slope correction networks. These networks tend to stabilize the gain of the amplifiers throughout the band 2 frequency range.

c. Capacitors C6 of all three stages are temperature compensating capacitors for band 2. Capacitors C8 of all three stages are temperature compensating capacitors for band 1. These capacitors maintain proper tank tuning throughout the temperature range of the receiver.

5-6. Oscillator-Mixer

a. The oscillator-mixer subassembly contains the local oscillator and the mixer circuits. The local oscillator is a conventional Clapp circuit that is tuned by section L1-A of the main tuning inductor. The oscillator frequency is 10.7 MHz above the RF input signal. Capacitor C13 is the temperature compensating capacitor for band 1 and capacitor C8 is the temperature compensating capacitor for band 2. These capacitors are used to stabilize the oscillator frequency throughout the operating temperature range of the receiver.

b. The output of the local oscillator is routed through capacitor C14 to gate 2 of the dual insulated gate field effect transistor mixer stage. The RF output from the third RF amplifier is routed to gate 1 of oscillator-mixer stage transistor Q2. The 10.7 MHz output of the mixer is taken from transformer T1 and routed to the IF output of the tuner.

Section II. AM RECEIVER SUBSYSTEM

5-7. General

The AM receiver subsystem is a multipurpose integrated circuit used in the detector module. This integrated circuit is used to perform the following functions; diode amplifier, IF amplifier-AM detector, agc amplifier, and audio preamplifier. The use of this integrated circuit conserves space, increases reliability and provides good performance. The AM detector portion of the integrated circuit is virtually unaffected by temperature throughout the operating range of the receiver.

5-8. Block Diagram

(fig. 5-1)

a. The 10.7 MHz IF signal from the third IF amplifier in the detector module is routed to pins 2 and 8 of the integrated circuit. Pin 2 is the input to the diode amplifier which provides approximately 20 db of voltage gain. The output is taken from pin 3 and routed to a voltage doubling circuit to produce the diode output of the receiver. Pin 1 is used to provide the proper bias for the diode amplifier.

pole, tunable bandpass filter. Tuning is provided by section L1-B of the main tuning inductor. Capacitor C11 and resistor R1 form a slope correction network to compensate for changes in gain throughout the frequency range. Capacitor C3 is a temperature compensating capacitor. The capacitive divider output network consisting of capacitors C9, C10, and C11 is selected to provide the best sensitivity consistent with the signal handling requirements of the receiver. The receiver is capable of handling a 0.5 volt signal without blocking, therefore the capacitive divider output cannot be too high or the first RF amplifier will limit. The output of the preselector is coupled to the first RF amplifier by inductor L4. The interstage coupling coils, L4, L5, L7, and L1, serve as high frequency chokes, thus eliminating any possibility of UHF oscillations due to the very high frequency response of the transistors used in the RF amplifier stages.

3-6. RF Amplifiers

a. The three RF amplifiers are the same except for the age circuit. The third stage is operated as a fixed gain stage with no age. Transistor Q1 in each stage is a dual insulated gate field effect transistor. Gate 2 is used for the age input. Due to the inherent gain versus gate 2 voltage characteristic, the age of the first and second rf amplifiers are delayed relative to the IF amplifiers. In addition, resistor R8 of the second RF amplifier provides a slight delay in the age action of the second RF amplifier relative to the first RF amplifier. This is necessary in order to accommodate the large dynamic range of input signals to the receiver, up to 0.5 volts. The total age range in the RF amplifiers exceeds 60 db.

b. When operating in the band 1 position, switches S1 and S2 closed as shown in figure FO-4, Coils L4 and resistors R6 of the first and second RF

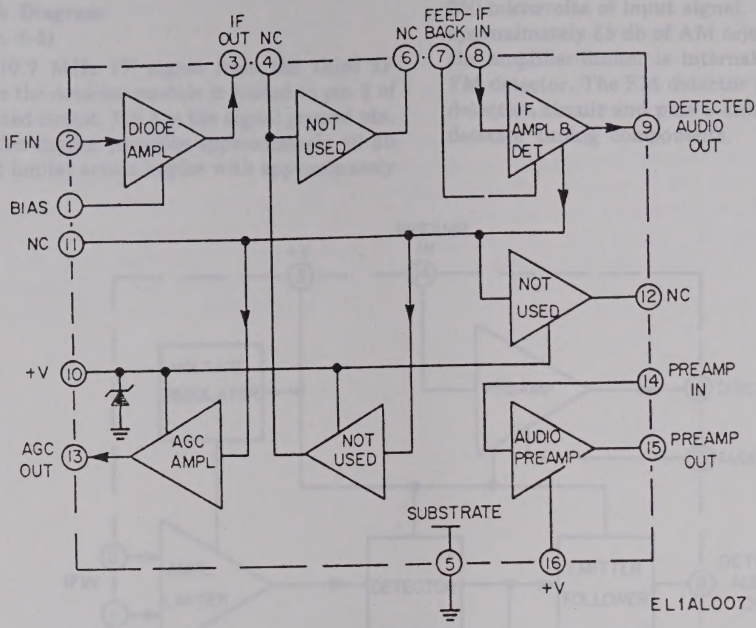

Figure 5-1. Block diagram, AM receiver subsystem integrated circuit.

b. The IF input signal at pin 8 is routed to the IF amplifier-AM detector portion of the integrated circuit. The detected audio is present at pin 9. The detector also provides a detected agc signal that is routed internally to the agc amplifier. The dc signal from the agc amplifier at pin 13 is used for the agc voltage in the RF tuner module and the IF amplifier module, and to drive the signal meter amplifier in the detector module. Pin 7 is used to provide feedback for the internal IF amplifier stage.

c. Pin 14 is the input to the audio preamplifier. The detected audio in all receive modes is routed to pin 14 through the FUNCTION switch and VOL control on the receiver front panel. The preamplifier provides approximately 20 db of voltage gain and produces the audio output at pin 15 which is routed to the audio amplifier in the detector module. The total distortion through the IF amplifier-AM detector stage and the audio preamplifier stange is less than 3 percent.

d. The supply voltage at pin 10 is internally regulated to approximately 5.6 vdc by a Zener diode for use in voltage sensitive areas of the integrated circuit.

e. Due to the internal configuration of the integrated circuit, it is possible for one function within the integrated circuit to fail and not affect the remaining functions. *For example,* the diode amplifier may fail causing the loss of diode output, but all other functions of the receiver may be normal. If the agc amplifier fails it may be possible to operate the receiver with the manual RF gain control. Thus portions of the integrated circuit may fail and still result in a usable,but limited, receiver.

Section IV. FM RECEIVER SUBSYSTEM

5-9. General

The FM receiver subsystem is a multipurpose integrated circuit used in the detector module. This integrated circuit is used to perform the following functions: IF amplifier-limiter, FM detector, and audio preamplifier. The use of this integrated circuit conserves space, increases reliability, and provides good performance. Performance of the integrated circuit is practically unaffected throughout the operating temperature range of the receiver.

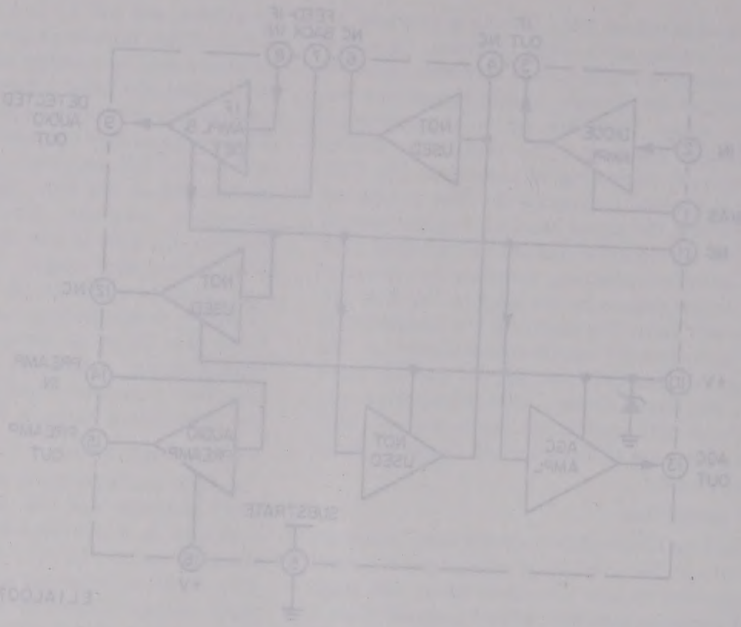

5-10. Block Diagram
(fig. 5-2)

a. The 10.7 MHz IF signal from the third IF amplifier in the detector module is routed to pin 2 of the integrated circuit. Pin 1 is the signal ground pin. The amplifier-limiter provides approximately 60 db of gain and limiter action begins with approximately 250 microvolts of input signal. The limiter provides approximately 55 db of AM rejection. The output of the amplifier-limiter is internally connected to the FM detector. The FM detector is a differential peak detection circuit and pins 9 and 10 are used for the detector tuning components.

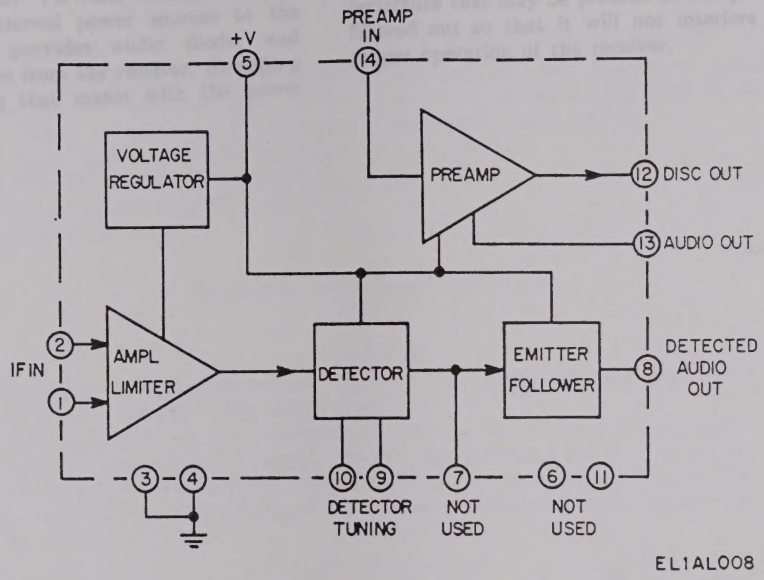

Figure 5-2. Block diagram, FM receiver subsystem integrated circuit.

b. The detected audio is internally routed to an emitter follower stage. The output of the emitter-follower at pin 8 is capacitively coupled to the input of the audio preamplifier at pin 14. The pre-amplifier has a voltage gain of approximately 20 db and has two outputs. The output at pin 12 is routed to the discriminator output of the receiver. The output at pin 13 is routed to the preamplifier in the AM receiver subsystem integrated circuit to produce the audio output of the receiver.

c. Dc power to the integrated circuit is applied at pin 5 through the receiver front panel FUNCTION switch only in the fm mode. The integrated circuit contains a voltage regulator which supplies power to all stages of the integrated circuit.

Section V. DUST COVER

5-11. General

The dust cover serves as a protective case for the receiver and contains the battery compartment, internal-external power switch, power connector, and the radio frequency interference (RFI) filter. The schematic diagram for the dust cover is shown in figure FO-3.

5-12. Functioning

a. Battery Compartment. The battery compartment is used to house 12 BA-30/U cells which power the receiver when the INT-EXT switch is in the INT position. The compartment is watertight and the battery is accessible through the cover on the back of the case. A diode, CR1, in series with the positive battery line prevents damage to the receiver if the cells are not properly inserted in the battery compartment.

b. Internal-External Switch. INT-EXT switch S1 is located on the rear of the dust cover and is used to select between battery power or external power.

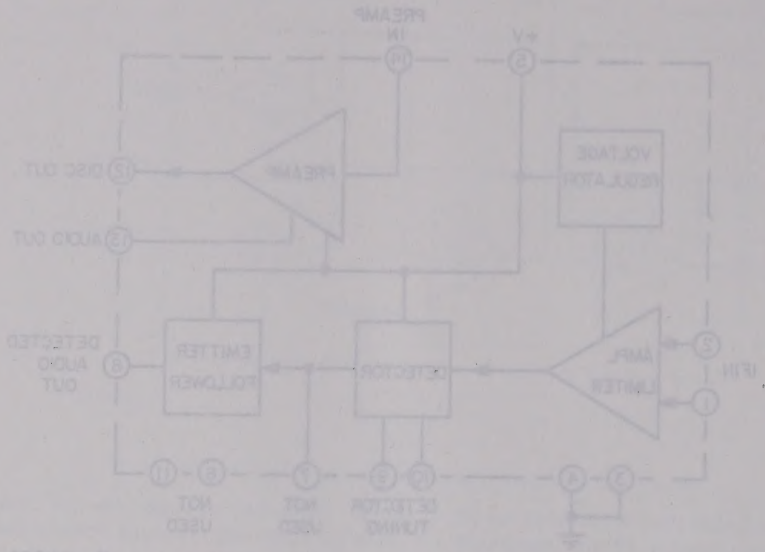
PREAMP IN
+V
DISC OUT
AUDIO OUT
PREAMP
VOLTAGE REGULATOR
DETECTED AUDIO OUT
EMITTER FOLLOWER
DETECTOR
AMPL LIMITER
NOT USED
DETECTOR TUNING
NOT USED

In the INT position, the battery is connected to the receiver power supply and any external power source that may be connected to the dust cover is disabled. In the EXT position, the battery is disconnected from the receiver power supply and the external power source which is connected to the multipin connector on the rear of the dust cover is connected to the receiver power supply.

c. Power Connector. POWER connector J2 is used to connect external power sources to the receiver and also provides audio diode, and discriminator outputs from the receiver. Strapping options in the plug that mates with the power connector provide operation from 110 or 220 vac, 50 to 400 Hz, or 24 vdc vehicular power sources. Power cables contained in Accessory Kit MK-1517/UR already are strapped to provide proper operation.

d. RFI Filter. RFI filter FL1 prevents any radio frequency interference from being conducted through the power cable to the receiver. Each conductor of the power line and the fuse conductors pass through a section of the filter. Thus any interference that may be present on the power line is filtered out so that it will not interfere with the proper operation of the receiver.

CHAPTER 6

DIRECT SUPPORT MAINTENANCE

Section I. GENERAL

1. Scope of Maintenance

This chapter describes the direct support maintenance requirements for Receiving Set, Radio AN/URR-71. These requirements include troubleshooting, repair testing, and adjustment. It should be noted that *intermediate* level repairs are performed by direct or general support, depending upon the complexity of the repair.

6-2. Tools and Test Equipment

All tools and test equipment required for direct support maintenance are listed in the Maintenance Allocation Chart (app B).

Section II. TROUBLESHOOTING

CAUTION

This equipment contains transistor circuits. Observe the following precautions to prevent damage to the components:
Test equipment requires an isolation transformer in the power supply circuit. Observe battery polarity; polarity reversal may damage transistors. If battery eliminators are used in testing, they must have good voltage regulation and low ac ripple so the voltage rating of the transistor equipment being tested is not exceeded.

6-3 General

This section contains procedures for isolating and localizing faulty subassemblies in Receiver R-1518/UR. The defective subassemblies shall be routed to general support maintenance for repair.

6-4. Troubleshooting

Troubleshooting of the receiver is accomplished by systematically testing the receiver and subassembly inputs and outputs. Table 6-1 should be used as guide in isolating common faults in the receiver. Be sure that organizational troubleshooting (table 4-4) has been previously accomplished and the fault has been isolated to the receiver's internal circuits or components before accomplishing these procedures.

NOTE

If a receiver fault cannot be corrected by using the procedure in this table, the fault may be in the wiring of the dust cover or the receiver chassis. Make resistance and continuity checks of the dust cover and the receiver chassis (para 6-15, 6-16 and 6-22). Refer to TM 11-5820-770-24P to determine if replacement parts are provisioned at the direct support maintenance catagory. If a replacement part is not available, or if the defect is in front panel assembly A1A1A1, forward the receiver to higher category of maintenance for repair.

Table 6-1. Direct Support Troubleshooting

Item	Symptom	Probable trouble	Corrective action
1	Receiver inoperative on batteries or external power (all modes and bandwidths; no power indication).	*a.* Defective FUNCTION switch.	*a.* Check continuity (para 6-16). If defective, forward receiver to higher category maintenance for repair.
		b. Defective power supply assembly.	*b.* Test power supply (para 6-20). Replace if needed (paras 6-6 and 6-9).
		c. Defective INT-EXT switch on dust cover.	*c.* Check continuity (para 6-22). Replace if needed (para 6-6 and 6-9).

CHAPTER 6

DIRECT SUPPORT MAINTENANCE

Section I. GENERAL

6-1. Scope of Maintenance

This chapter describes the direct support maintenance requirements for Receiving Set, Radio AN/URR-71. These requirements include troubleshooting, repair testing, and adjustment. It should be noted that intermediate level repairs are performed by direct or general support, depending upon the complexity of the repair.

6-2. Tools and Test Equipment

All tools and test equipment required for direct support maintenance are listed in the Maintenance Allocation Chart (app B).

Section II. TROUBLESHOOTING

6-3. General

This section contains procedures for isolating and localizing faulty subassemblies in Receiver R-1818/URR. The defective subassemblies shall be routed to general support maintenance for repair.

6-4. Troubleshooting

Troubleshooting of the receiver is accomplished by systematically testing the receiver and subassembly inputs and outputs. Table 6-1 should be used as a guide in isolating common faults in the receiver. Be sure that organizational troubleshooting (table 4-1) has been previously accomplished and the fault has been isolated to the receiver's internal circuits or components before accomplishing these procedures.

Table 6-1. Direct Support Troubleshooting

Item	Symptom	Probable trouble	Corrective action
1	Receiver inoperative on batteries or external power (all modes and bandwidths); no power indication.	a. Defective FUNCTION switch.	a. Check continuity (para 6-16). If defective, forward receiver to higher category maintenance for repair.
		b. Defective power supply assembly.	b. Test power supply (para 6-20). Replace if needed (paras 6-6 and 6-9).
		c. Defective INPUT-OUT switch on front panel.	c. Check continuity (para 6-22). Replace if needed (para 6-6 and 6-9).

Table 6-1. Direct Support Troubleshooting—Continued

Item	Symptom	Probable trouble	Corrective action
2	Receiver inoperative on ac external power only.	*a.* Defective power transformer.	*a.* Check power transformer (para 6-15). Replace if needed (para 6-6 and 6-9).
		b. Defective FUNCTION switch.	*b.* Check continuity (para 6-16). If defective, forward receiver to higher category maintenance for repair.
3	Receiver inoperative on vehicular external power only.	*a.* Defective power supply diode.	*a.* Test power supply (para 6-20). Replace if needed (para 6-6 and 6-9).
		b. Defective FUNCTION switch.	*b.* Check continuity (para 6-16). If defective, forward receiver to higher category maintenance for repair.
4	Receiver inoperative on internal power only.	*a.* Defective diode in dust cover.	*a.* Check continuity (para 6-22). Replace diode if needed (para 6-6 and 6-9).
		b. Defective INT-EXT switch in dust cover.	*b.* Check continuity (para 6-22). Replace switch if needed (para 6-6 and 6-9).
		c. Defective FUNCTION switch.	*c.* Check continuity (para 6-16). If defective, forward receiver to higher level maintenance for repair.
5	No audio output (all modes and bandwidths; but have signal meter indication.	*a.* Defective headset.	*a.* Replace headset.
		b. Defective detector assembly.	*b.* Test detector (para 6-19). If defective, forward receiver to higher category of maintenance for repair.
		c. Defective VOLUME control.	*c.* Check resistance (para 6-16). If defective, forward receiver to higher category of maintenance for repair.
		d. Defective FUNCTION switch.	*d.* Check continuity (para 6-16). If defective, forward receiver to higher category of maintenance for repair.
6	No audio output and no signal meter indication (power indication normal).	*a.* Defective calibration oscillator if used.	*a.* Test calibration oscillator (para 6-21). If defective, forward receiver to higher category of maintenance for repair.
		b. Defective antenna switch.	*b.* Check continuity (para 6-16). If defective, forward receiver to higher category of maintenance for repair.
		c. Defective antenna TRIM capacitor.	*c.* Check for short circuit (para 6-16). If defective, forward radio to higher category of maintenance for repair.
		d. Defective detector assembly.	*d.* Test detector assembly (para 6-19). If defective, forward receiver to higher category of maintenance for repair.
		e. Defective IF amplifier assembly.	*e.* Test IF amplifier (para 6-18). If defective, forward receiver to higher category of maintenance for repair.
		f. Defective RF tuner assembly.	*f.* Test RF tuner (para 6-17). If defective, forward receiver to higher category of maintenance for repair.

Table 6-1. Direct Support Troubleshooting—Continued

Item	Symptom	Probable trouble	Corrective action
7	No audio output on CAL position only.	*a.* Defective calibration oscillator assembly.	*a.* Test calibration oscillator (para 6-21). If defective, forward receiver to higher category of maintenance for repair.
		b. Defective FUNCTION switch.	*b.* Check continuity (para 6-16). If defective, forward receiver to higher category of maintenance for repair.
8	No audio output on FM or AM only.	*a.* Defective detector assembly.	*a.* Test detector (para 6-19). If defective, forward receiver to higher category of maintenance for repair.
		b. Defective FUNCTION switch.	*b.* Check continuity (para 6-16). If defective forward receiver to higher category of maintenance for repair.
9	No audio output on CW and CAL only.	*a.* Defective detector assembly	*a.* Test detector (para 6-19). If defective forward receiver to higher category of maintenance for repair.
		b. Defective FUNCTION switch.	*b.* Check continuity (para 6-16). If defective, forward receiver to higher category of maintenance for repair.
10	No audio output on one band only.	Defective RF tuner assembly.	Test RF tuner (para 6-17). If defective, forward receiver to high category of maintenance for repair.
11	No audio output on one bandwidth only.	Defective IF amplifier assembly.	Test IF amplifier (para 6-18). If defective, forward receiver to higher category of maintenance for repair.
12	No DIODE output.	Defective detector assembly.	Test detector (para 6-19). If defective, forward receiver to higher category of maintenance for repair.
13	No DISCR output on FM.	Defective detector assembly.	Test detector (para 6-19). If defective, forward receiver to higher category of maintenance for repair.
14	Dial light will not light under any condition.	*a.* Defective bulb.	*a.* Check continuity (para 6-16). If defective, forward receiver to higher category of maintenance for repair.
		b. Defective LITE switch.	*b.* Check continuity (para 6-16). If defective, forward receiver to higher category of maintenance for repair.
15	Dial light remains on under all conditions.	Defective LITE switch.	Check continuity (para 6-16). If defective, forward receiver to higher category of maintenance for repair.
16	Dial light will not light in M ON position of LITE switch when on INT power.	Defective LITE switch.	Check continuity (para 6-16). If defective, forward receiver to higher category of maintenance for repair.
17	No audio, discriminator,or diode output at dust cover connector only.	Broken wire, loose connection or broken connector.	Check continuity (para 6-22). Repair if needed (para 6-6 and 6-9).
18	Receiver indicates wrong frequency.	Defective RF tuner assembly.	Test tuner (para 6-17). If defective, forward receiver to higher category of maintenance for repair.

Table 6-1. Power Supply Troubleshooting—Continued

Item	Symptom	Probable trouble	Corrective action
7	No audio output on CAL position only.	a. Defective calibration oscillator assembly.	a. Test calibration oscillator assembly. If defective, forward assembly to higher category of maintenance for repair.
		b. Defective FUNCTION switch.	b. Check continuity (para 6-16). If defective, forward receiver to higher category of maintenance for repair.
8	No audio output on TM or AM only.	a. Defective detector assembly.	a. Test detector (para 6-19). If defective, forward receiver to higher category of maintenance for repair.
		b. Defective FUNCTION switch.	b. Check continuity (para 6-16). If defective forward receiver to higher category of maintenance for repair.
9	No audio output on CW and CAL only.	a. Defective detector assembly.	a. Test detector (para 6-19). If defective forward receiver to higher category of maintenance for repair.
		b. Defective FUNCTION switch.	b. Check continuity (para 6-16). If defective, forward receiver to higher category of maintenance for repair.
10	No audio output on one band only.	Defective RF tuner assembly.	Test RF tuner (para 6-17). If defective, forward receiver to high category of maintenance for repair.
11	No audio output on one band only.	Defective IF amplifier assembly.	Test IF amplifier (para 6-18). If defective, forward receiver to higher category of maintenance for repair.
12	No DIODE output.	Defective detector assembly.	Test detector (para 6-19). If defective, forward receiver to higher category of maintenance for repair.
13	No DIODE output on TM.	Defective detector assembly.	Test detector (para 6-19). If defective, forward receiver to higher category of maintenance for repair.
14	Dial light will not light under any condition.	a. Defective bulb.	a. Check continuity (para 6-16). If defective, forward receiver to higher category of maintenance for repair.
		b. Defective LITE switch.	b. Check continuity (para 6-16). If defective, forward receiver to higher category of maintenance for repair.
15	Dial light remains on under all conditions	Defective LITE switch.	Check continuity (para 6-16). If defective, forward receiver to higher category of maintenance for repair.
16	Dial light will not light in M ON position of LITE switch when on line power.	Defective LITE switch.	Check continuity (para 6-16). If defective, forward receiver to higher category of maintenance for repair.
17	No audio, discriminator diode output at dual coax connector only.	Broken wire, loose connection or broken connector.	Check continuity (para 6-22). Repair if needed (para 6-6 and 6-9)
18	Receiver indicates wrong frequency.	Defective RF tuner assembly.	Test tuner (para 6-17). If defective, forward receiver to higher category of maintenance for repair.

Table 6-1. Direct Support Troubleshooting—Continued

Item	Symptom	Probable trouble	Corrective action
19	Panel meter inoperative under all conditions.	*a.* Defective meter.	*a.* Check continuity (para 6-16). If defective, forward receiver to higher category of maintenance for repair.
		b. Defective PWR CHK switch.	*b.* Check continuity (para 6-26). If defective, forward receiver to higher category of maintenance for repair.
20	No signal strength indication on meter (power check normal).	*a.* Misadjusted or defective detector assembly.	*a.* Test and readjust detector (para 6-14) and 6-19). If defective, forward receiver to higher category of maintenance for repair.
		b. Defective RWR CHK switch.	*b.* Check continuity (para 6-16). If defective, forward receiver to higher category of maintenance for repair.
21	No power indication on meter (signal normal).	*a.* Defective PWR CHK switch.	*a.* Check continuity (para 6-16). If defective, forward receiver to higher category of maintenance for repair.
		b. Defective resistor in power supply.	*b.* Test power supply (para 6-20). Replace if needed (para 6-8).
22	Receiver inoperable on one antenna output.	*a.* Defective antenna connector.	*a.* Check continuity (para 6-16). If defective, forward receiver to higher category of maintenance for repair.
		b. Defective whip antenna if used.	*b.* Check continuity (para 6-23). Repair or replace if needed.
		c. Defective ANT switch.	*c.* Check continuity (para 6-16). If defective, forward receiver to higher category of maintenance for repair.
23	Weak signals (low sensitivity).	*a.* IF amplifier assembly misadjusted or defective.	*a.* Test and readjust IF amplifier (para 6-14 and 6-18). If defective, forward receiver to higher category of maintenance for repair.
		b. Defective detector assembly.	*b.* Test detector (para 6-19). If defective, forward receiver to higher category of maintenance for repair.
		c. Defective RF tuner assembly.	*c.* Test tuner (para 6-17). If defective, forward receiver to higher category of maintenance for repair.
24	Broken or defective knobs.		Replace as needed (para 6-8).

Section III. MAINTENANCE

6-5. General

This section contains corrective maintenance procedures for Receiver R-1518/UR. Instructions are provided for disassembly, inspection, repair, and reassembly of the receiver.

6-6. Disassembly

a. Disassembly of Radio Receiver A1.

NOTE

Disassemble the receiver only to the extent necessary to make repairs. Do not disassemble the receiver beyond that which is specified in this paragraph.

(1) *Dust cover removal* (fig. FO-15).

(*a*) Turn FUNCTION switch to OFF.

(*b*) Remove power cable, if connected.

(*c*) Remove screw (3) on rear of dust cover.

(*d*) Loosen two captive screws on front panel and pull receiver (1) out of dust cover (2).

(2) *Disassembly of dust cover assembly A1A2* (fig. FO-16).

(*a*) *Battery cover and battery removal.*

1. Loosen two captive thumbscrews on battery cover.

2. Remove battery cover (5) and twelve BA-30/U cells from the battery compartment.

(*b*) *Components and wiring removal.*

NOTE

Replacement of components or repair of broken wires in the dust cover is more easily accomplished if the entire wiring harness and the attached components are removed from the case.

1. Remove nut from INT-EXT switch (2).

2. Remove nut from POWER connector (1).

3. Remove two screws (7) from connector J1 (6).

4. Remove mounting hardware (13, 14) from RFI (power) filter FL1 (12).

5. Unsolder wire from terminal E2 and remove entire wiring and components from dust cover.

b. Disassembly of Radio Assembly A1A1 (fig. FO-17).

(1) *IF amplifier assembly A1A1A3 removal.*

(*a*) Place the BANDWIDTH switch in the 75 kHz position.

(*b*) Remove four screws on the receiver chassis (not the cover (5) screws).

(*c*) Lift straight up on the assembly (1) to remove.

(2) *Detector assembly A1A1A4 removal.*

(*a*) Loosen captive screw on top of the assembly (28).

(*b*) Remove two screws (23) on the receiver chassis.

(*c*) Pull up gently on the assembly to disengage the connector (26).

(*d*) Unplug the coaxial connector to free the assembly.

(3) *Calibration oscillator assembly A1A1A6 removal.*

(*a*) Remove two screws (46) on top of the assembly (44).

(*b*) Pull straight up to remove the assembly.

(4) *Power Supply assembly A1A1A5 removal.*

(*a*) Remove four screws (11) on top of the printed wiring board.

(*b*) Pull up on both printed wiring boards to disengage the connector and the heatsinks.

(5) *Power transformer A1A1T1 removal.*

(*a*) Remove two screws (24, 25) and spacer on the receiver chassis.

(*b*) Unsolder and tag all wires from the transformer terminals.

6-7. Inspection

a. Remove and inspect the dust cover for dents, corrosion, loose terminals, loose wires, missing hardware, or signs of arcing or overheating.

b. Inspect the receiver assembly for dents, corrosion, loose terminals, loose wires, missing hardware, or signs of arcing or overheating.

c. Inspect the IF amplifier, detector, and calibration oscillator assembly housings for dents, corrosion, or missing hardware.

d. Inspect the IF amplifier, detector, calibration oscillator, and power supply printed wiring boards for cracks, warping, corrosion, or signs of overheating.

e. Inspect the power transformer for signs of arcing or overheating.

f. Inspect the front panel controls and the dust cover switch and connectors for damage.

6-8. Replacement and Repair

a. Replacement. Refer to paragraphs 6-6 and 6-9 for replacement instructions for replacement of the IF amplifier, detector, calibration oscillator, power supply, and power transformer.

b. Knob replacement.

(1) The tuning control (TUNE) knob cannot be replaced at this maintenance category. Forward receivers with defective tuning control knobs to higher category of maintenance for replacement.

(2) On pointer-type knobs, note the position of the pointer and replace with a serviceable part. Make sure the pointer is oriented properly before securing.

6-9. Reassembly

a. Reassembly of Receiver Assembly A1A1 (fig. FO-17).

CAUTION

Exercise care to prevent pinched wires during the installation of the assemblies.

(1) *Power transformer A1A1T1 installation.*

(*a*) Solder wires to transformer terminals and remove the wire tags.

(*b*) Insert longest screw (25) through the receiver chassis and install spacer (16) over screw.

(*c*) Place the transformer over the spacer and secure with the two screws (24) through the receiver chassis.

(2) *Power supply assembly A1A1A5 installation.*

(*a*) Orient the printed wiring boards so that the connector and the heatsinks are engaged.

(*b*) Secure the assembly with four screws

(11), flat washers (12), and lockwashers (3) through the printed wiring boards.

(3) *Calibration oscillator assembly A1A1A6 installation.*

(*a*) Orient the assembly (44) so that the pins engage the sockets on the chassis.

(*b*) Secure the assembly with two screws (46) through the module housing.

(4) *Detector assembly A1A1A4 installation.*

(*a*) Plug the loose coaxial connector (not shown) into the coaxial connector in the assembly (28).

(*b*) Orient the assembly so that the connector (26) engages with the chassis connector.

(*c*) Secure the assembly by two screws (23) through the receiver chassis and the captive screw in the assembly.

(5) *IF amplifier assembly A1A1A3 installation.*

(*a*) Be sure that the flat on the bandwidth switch shaft inside the assembly is against the switch actuator plate.

(*b*) Place the receiver BANDWIDTH switch in the 75 kHz position.

(*c*) Orient the assembly so that the bandwidth switch coupling and the assembly connectors are engaged.

(*d*) Secure the assembly with four screws through the receiver chassis.

b. Reassembly of Dust Cover Assembly A1A2. Reassemble the dust cover by reversing the procedure given in paragraph 6-6*a*(2). Be sure that the wiring lays in the channel formed by the tabs inside of the dust cover case.

c. Reassembly of Radio Receiver A1.

(1) *Dust cover installation* (fig. FO-15).

(*a*) Insert receiver into dust cover so that connectors are engaged.

(*b*) Secure the assembly with two captive screws on the receiver front panel and one screw on the rear of the dust cover.

Section IV. TESTING

6-10. General

Direct support testing is limited to testing all major subassemblies while these subassemblies are installed in the receiver or extended by means of cable extenders. When testing shows a subassembly to be defective, forward the defective subassembly to general support maintenance for repair.

6-11. Physical Tests and Inspection

a. Inspect the exterior of the unit as described in table 4-1.

b. Check all receiver controls for ease of operation.

c. Remove the dust cover and the batteries (para. 6-6).

d. Inspect the subassemblies (para. 6-7).

6-12. Receiver Electrical Tests, Preliminary Test Setup

WARNING

The 110 vac or 220 vac power to the receiver is lethal. The voltage is present at the input to the power transformer, which is not accessible unless the transformer is removed from the chassis. Do not remove the power transformer from the chassis during testing. The voltage is also present at the fuse terminals and at the FUNCTION switch terminals. Exercise caution to avoid these areas while testing.

NOTE

Perform *b* and *d* below only if test setup calls for separation of the dust cover. See applicable tests.

a. Set the FUNCTION switch to OFF.

b. Remove the receiver from the dust cover (para 6-6).

c. Set the POWER switch on the rear of the dust cover to EXT.

d. Connect Extension Cable CX-12953/U (part of accessory kit) between the receiver and the dust cover.

e. Connect the applicable 110 vac, 220 vac, or vehicular power cable (part of accessory kit) to the POWER connector on the dust cover.

f. Connect the power cable connector to a 110 vac, 220 vac, or 24 vdc vehicular outlet, as appropriate.

6-13. Receiver R-1518/ UR (A1) Testing

a. Panel Meter Test.

(1) Accomplish the preliminary test setup (para 6-12) except, omit *b* and *d* above.

(2) Connect the test equipment as shown in figure 6-1.

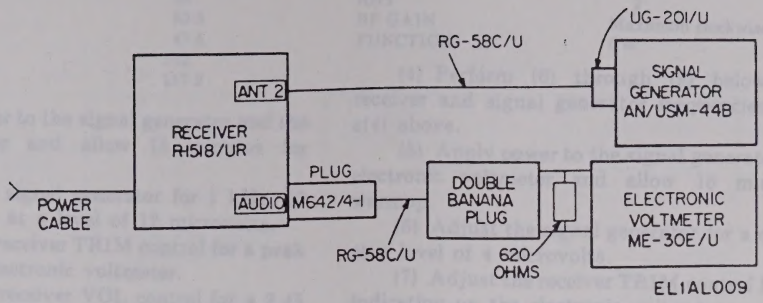

Figure 6-1. Panel meter test connections.

(3) Set the receiver controls as follows:

Control	Setting
BAND	1
TUNE	35 MHz
BANDWIDTH	10 kHz
ANT	2
RF GAIN	AVC
VOL	Midrange
TRIM	Midrange
FUNCTION	AM

(4) With power applied to the receiver and no input signal, observe a panel meter indication of no more than 10 percent of full scale.

(5) Apply power to the signal generator and the electronic voltmeter.

(6) Set the output of the signal generator for 35 MHz, 30 percent, 1 kHz modulation at a level of 500 millivolts.

(7) Vary the frequency of the signal generator to produce a peak indication on the electronic voltmeter.

(8) Observe a panel meter indication of near full scale.

(9) Disconnect the signal generator from the test setup.

(10) Activate the PWR CHK switch. The panel meter should indicate near the upper limit of the green area.

(11) Remove the power from the receiver and disconnect the test setup.

b. Dial Light Test.

(1) Perform *a*(1) above.

(2) Place the front panel LITE switch in the ON and M-ON positions. The frequency dial should be illuminated in each position.

c. Am Sensitivity Test.

(1) Perform *a*(1) abvoe.

(2) Connect the test equipment as shown in figure 6-2.

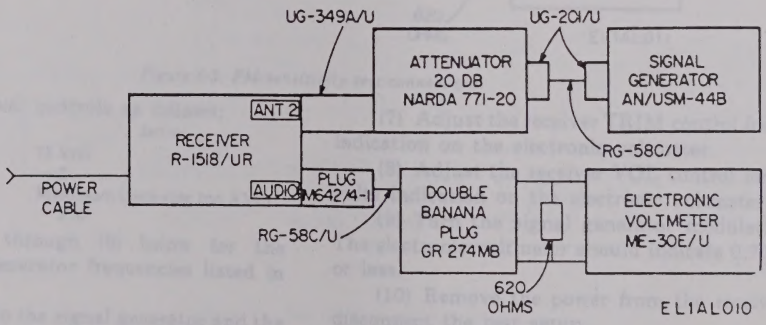

Figure 6-2. AM and CW sensitivity test connections.

(3) Set the receiver controls as follows:

Control	Setting
BANDWIDTH	10 kHz
ANT	2
RF GAIN	Maximum clockwise (no AVC)
FUNCTION	AM

(4) Perform (6) through (9) below for the following receiver and signal generator frequencies:

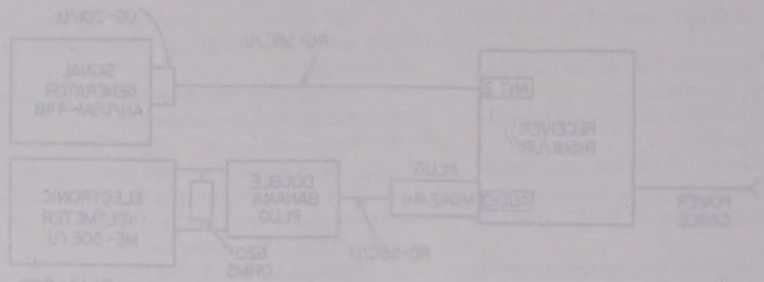

Band	Frequency (MHz)
1	19.0
1	35
1	52.5
2	47.5
2	102
2	157.2

(5) Apply power to the signal generator and the electronic voltmeter and allow 15 minutes for warmup.

(6) Adjust the signal generator for 1 kHz, 30 percent modulation at a level of 12 microvolts.

(7) Adjust the receiver TRIM control for a peak indication on the electronic voltmeter.

(8) Adjust the receiver VOL control for a 2.45 volt indication on the electronic voltmeter.

(9) Turn the signal generator modulation off. The electronic voltmeter should indicate 0.775 volt or less.

(10) Remove power from the receiver and disconnect the test setup.

d. CW Sensitivity Test.

(1) Perform *a*(1) above.

(2) Connect the test equipment as shown in figure 6-2.

(3) Set the receiver controls as follows:

Control	Setting
BANDWIDTH	10 kHz
ANT	2
RF GAIN	Maximum clockwise (no AVC)
FUNCTION	CW

(4) Perform (6) through (9) below for the receiver and signal generator frequencies listed in *c*(4) above.

(5) Apply power to the signal generator and the electronic voltmeter and allow 15 minutes for warmup.

(6) Adjust the signal generator for a cw output at a level of 4 microvolts.

(7) Adjust the receiver TRIM control for a peak indication on the electronic voltmeter.

(8) Adjust the receiver VOL control for a 2.45 volts indication on the electronic voltmeter.

(9) Disconnect the signal generator from the attenuator. The electronic voltmeter should indicate 0.775 volt or less.

(10) Remove power from the receiver and disconnect the test setup.

e. Fm Sensitivity Test.

(1) Perform *a*(1) above.

(2) Connect the test equipment as shown in figure 6-3.

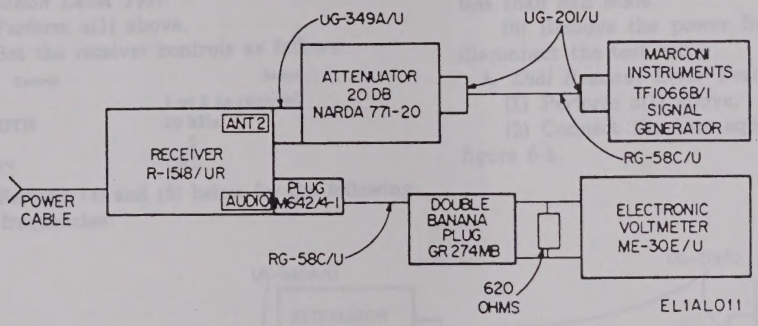

Figure 6-3. FM sensitivity test connections.

(3) Set the receiver controls as follows:

Control	Setting
BANDWIDTH	75 kHz
ANT	2
RF GAIN	Maximum clockwise (no AVC)
FUNCTION	FM

(4) Perform (6) through (9) below for the receiver and signal generator frequencies listed in *c*(4) above.

(5) Apply power to the signal generator and the electronic voltmeter and allow 15 minutes for warmup.

(6) Adjust the signal generator for 1 kHz modulating frequency, 15 kHz deviation, and a level of 12 microvolts.

(7) Adjust the receiver TRIM control for a peak indication on the electronic voltmeter.

(8) Adjust the receiver VOL control for a 2.45 volts indication on the electronic voltmeter.

(9) Turn the signal generator modulation off. The electronic voltmeter should indicate 0.775 volts or less.

(10) Remove the power from the receiver and disconnect the test setup.

f. Frequency Calibrator Accuracy Test.

(1) Perform the preliminary test setup of paragraph 6-12.

(2) Connect the test equipment as shown in figure 6-4.

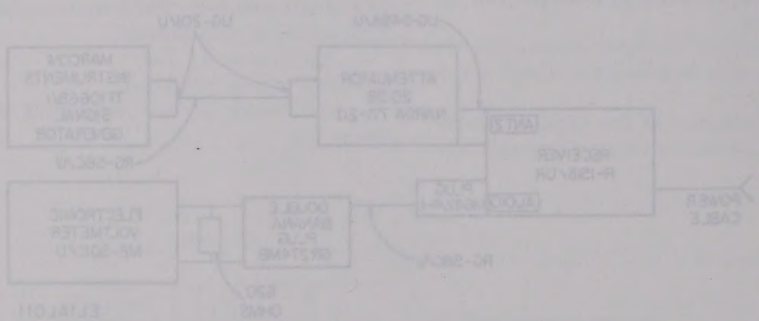

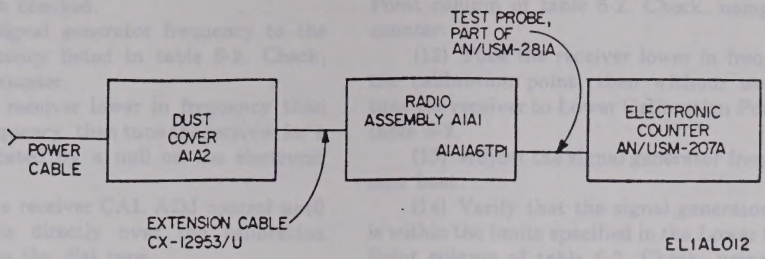

Figure 6-4. Frequency calibrator accuracy test connections.

(3) Set the receiver controls as follows:

Control	Setting
BAND	1
ANT	2
FUNCTION	CAL

(4) Apply power to the electronic counter and allow 15 minutes warmup.

(5) The electronic counter should read 1,999,900 Hz to 2,000,100 Hz.

(6) Remove the power from the receiver and disconnect the test setup.

g. Injection Level Test.

(1) Perform *a*(1) above.

(2) Set the receiver controls as follows:

Control	Setting
BAND	1 or 2 as required
BANDWIDTH	10 kHz
ANT	2
FUNCTION	CAL

(3) Perform (4) and (5) below for the following receiver frequencies:

Band	Frequency (kHz)
1	20
1	36
1	52
2	48
2	102
2	156

(4) Set the receiver RF GAIN control maximum clockwise (no AVC). The panel meter should indicate greater than half scale.

(5) Set the receiver RF GAIN control maximum counterclockwise. The panel meter should indicate less than half scale.

(6) Remove the power from the receiver and disconnect the test setup.

h. Dial Readout Error Test.

(1) Perform *a*(1) above.

(2) Connect the test equipment as shown in figure 6-5.

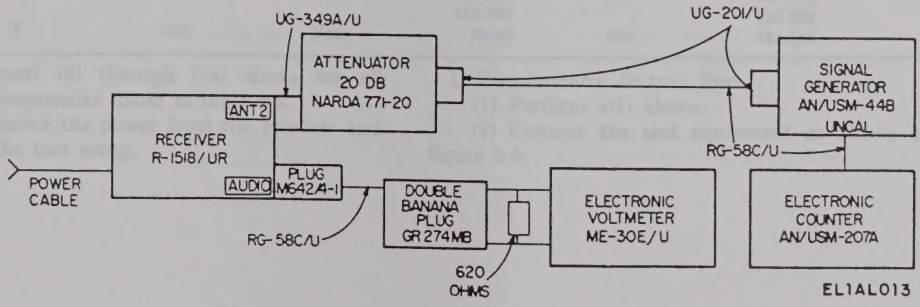

Figure 6-5. Dial readout error test connection.

(3) Set the receiver controls as follows:

Control	Setting
BANDWIDTH	10kHz
ANT	2
RF GAIN	AVC
VOL	Midrange
FUNCTION	CW

(4) Apply power to the test equipment and allow a 15 minute warmup.

(5) Adjust the signal generator for a cw output of 100 microvolts.

NOTE

The calibration points below 20 MHz and 48

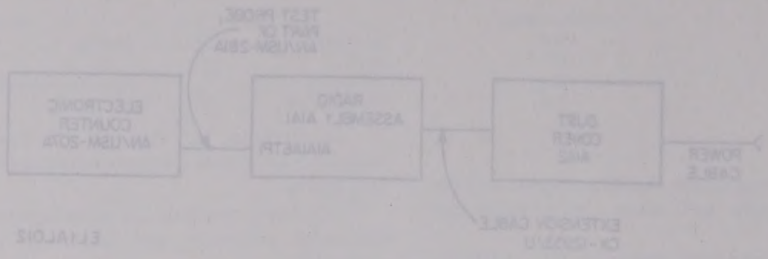

Figure 6-4. Frequency calibrator accuracy test connections.

(3) Set the receiver controls as follows:

Control	Setting
BAND	1
ANT	2
FUNCTION	CAL

(4) Apply power to the electronic counter and allow 15 minutes warmup.

(5) The electronic counter should read 1,999,900 Hz to 2,000,100 Hz.

(6) Remove the power from the receiver and disconnect the test setup.

g. Injection Level Test.

(1) Perform a(1) above.

(2) Set the receiver controls as follows:

Control	Setting
BAND	1 or 2 as required
BANDWIDTH	10 kHz
ANT	2
FUNCTION	CAL

(3) Perform (4) and (5) below for the following receiver frequencies:

Band	Frequency (MHz)
1	20
1	36
1	52
2	48
2	102
2	169

(4) Set the receiver RF GAIN control maximum clockwise (no AVC). The panel meter should indicate greater than half scale.

(5) Set the receiver RF GAIN control maximum counterclockwise. The panel meter should indicate less than half scale.

(6) Remove the power from the receiver and disconnect the test setup.

h. Dial Readout Error Test.

(1) Perform a(1) above.

(2) Connect the test equipment as shown in figure 6-5.

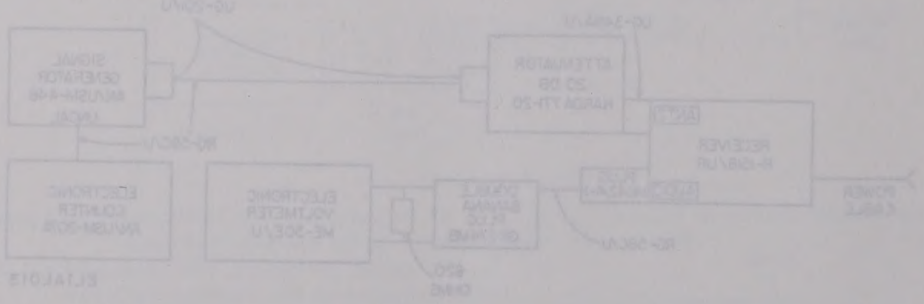

Figure 6-5. Dial readout error test connection.

(3) Set the receiver controls as follows:

Control	Setting
BANDWIDTH	10kHz
ANT	2
RF GAIN	AVC
TOL	Midrange
FUNCTION	CW

(4) Apply power to the test equipment and allow a 15 minute warmup.

(5) Adjust the signal generator for a cw output of 100 microvolts.

NOTE

The calibration points below 20 MHz and 48

MHz and above 52 MHz and 156 MHz are outside of the frequency range of the receiver and cannot be checked.

(6) Set the signal generator frequency to the Calibration Frequency listed in table 6-2. Check, using electronic counter.

(7) Tune the receiver lower in frequency than the calibration frequency, then tune the receiver for a zero beat as indicated by a null on the electronic voltmeter.

(8) Adjust the receiver CAL ADJ control until the dial cursor is directly over the calibration frequency mark on the dial tape.

(9) Without overshooting, tune the receiver to the Upper Calibration Point listed in table 6-2.

(10) Adjust the signal generator frequency for a zero beat.

(11) Verify that the signal generator frequency is within the limits specified in the Upper Calibration Point column of table 6-2. Check, using electronic counter.

(12) Tune the receiver lower in frequency than the calibration point, then without overshooting, tune the receiver to Lower Calibration Point listed in table 6-2.

(13) Adjust the signal generator frequency for a zero beat.

(14) Verify that the signal generator frequency is within the limits specified in the Lower Calibration Point column of table 6-2. Check, using electronic counter.

Table 6-2. Calibration Frequencies

Band	Calibration Frequency (MHz)	Upper Calibration Point (MHz)	Limit (MHz)	Lower Calibration Point (MHz)	Limit (MHz)
1	20	22	21.950	None	None
			22.050		
1	28	30	29.950	26	29.950
			30.050	36	26.050
1	36	38	37.950		33.950
			38.050	34	34.050
1	44	46	45.950	42	41.950
			46.050		42.050
1	52	None	None	50	49.950
					50.050
2	48	50	49.950	None	None
			50.050		
2	76	78	77.941	74	73.944
			78.059		74.056
2	102	104	103.922	100	99.925
			104.078		100.075
2	130	132	131.901	128	127.904
			132.099		128.096
2	156	None	None	154	154.116

(15) Repeat (6) through (14) above for all calibration frequencies listed in table 6-2.

(16) Remove the power from the receiver and disconnect the test setup.

i. Discriminator Output Test.

(1) Perform *a*(1) above.

(2) Connect the test equipment as shown in figure 6-6.

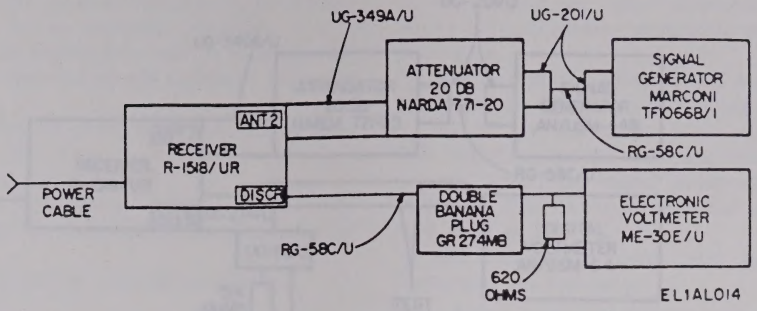

Figure 6-6. Discriminator output test connections.

(3) Set the receiver controls as follows:

Control	Setting
BAND	2
TUNE	100 MHz
BANDWIDTH	75 kHz
ANT	2
RF GAIN	Maximum clockwise (no AVC)
FUNCTION	FM

(4) Apply power to the test equipment and allow 15 minutes for warmup.

(5) Adjust the signal generator for 1 kHz modulating frequency, 15 kHz deviation, RF frequency of 100 MHz, and a level of 12 microvolts.

(6) Adjust the receiver TRIM control for a peak indication on the electronic voltmeter. The electronic voltmeter should indicate 50 millivolts or greater.

(7) Remove the power from the receiver and disconnect the test setup.

j. Audio Output Test.

(1) Perform *a*(1) above.

(2) Connect the test equipment as shown in figure 6-5.

(3) Set the receiver controls as follows:

Control	Setting
BAND	2
TUNE	100 MHz
BANDWIDTH	10 kHz
RF GAIN	Maximum clockwise (no AVC)
VOLUME	Maximum clockwise
ANT	2
FUNCTION	AM

(4) Apply power to the test equipment and allow 15 minutes for warmup.

(5) Adjust the signal generator for 100 MHz with 1 kHz, 30 percent modulation and a level of 12 microvolts.

(6) Adjust the receier TRIM control for a peak indication on the electronic voltmeter.

(7) Observe that the electronic voltmeter indicates 3.5 volts or greater.

(8) Deleted.

(9) Set the receiver BANDWIDTH control to 75 kHz and the FUNCTION switch to FM.

(10) Apply power to the test equipment and allow 15 minutes for warmup.

(11) Adjust the signal generator to 100 MHz with a 1 kHz modulating frequency deviated 15 kHz and a level of 12 microvolts.

(12) Adjust the receiver TRIM control for a peak indication on the electronic voltmeter.

(13) Observe that the electronic voltmeter indicates 3.5 volts or greater.

(14) Remove the power from the receiver and disconnect the test setup.

k. Diode Output Test.

(1) Perform *a*(1) above.

(2) Connect the test equipment as shown in figure 6-7.

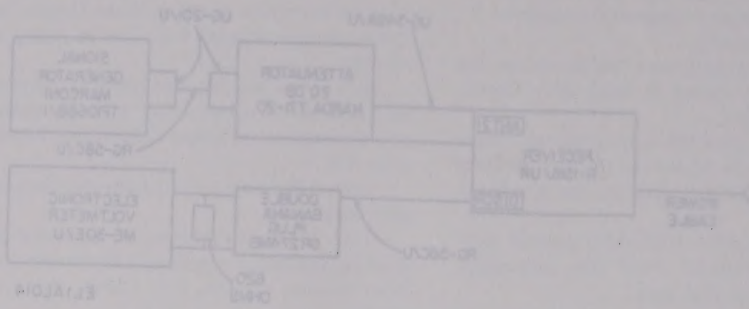

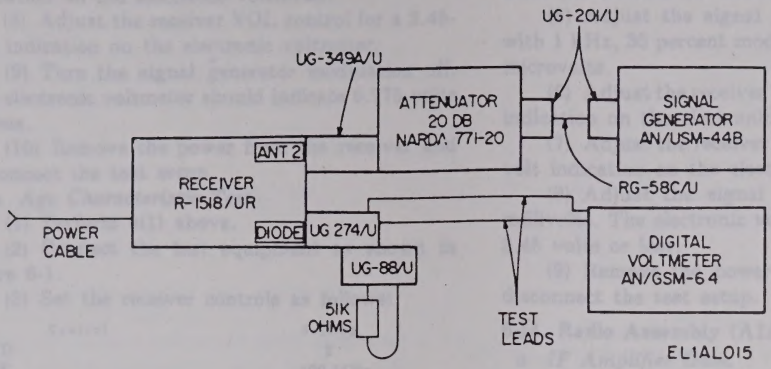

Figure 6-7. Diode output test connections.

(3) Set the receiver controls as follows:

Control	Setting
BAND	2
ANT	2
BANDWIDTH	10 kHz
RF GAIN	Maximum clockwise (no AVC)
FUNCTION	AM
TUNE	100 MHz

(4) Apply power to the test equipment and allow 15 minutes for warmup.

(5) Adjust the signal generator for 100 MHz with 1 kHz, 30 percent modulation and a level of 12 microvolts.

(6) Adjust the receiver TRIM control for a peak indication on the digital voltmeter.

(7) Observe that the digital voltmeter indicates 2 volts dc or greater. The voltage should be negative with respect to ground.

(8) Remove the power from the receiver and disconnect the test setup.

l. AM Whip Sensitivity Test.

(1) Perform *a*(1) above.

(2) Connect the test equipment as shown in figure 6-8.

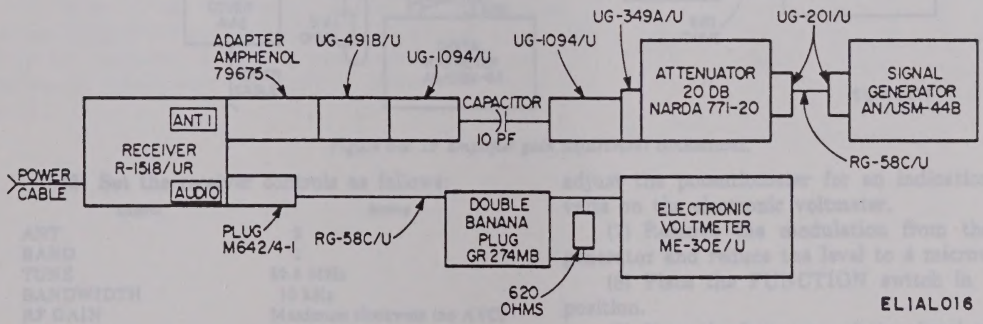

Figure 6-8. AM whip sensitivity test connections.

(3) Set the receiver controls as follows:

Control	Setting
ANT	1
BANDWIDTH	10 kHz
RF GAIN	Maximum clockwise (no AVC)
FUNCTION	AM

(4) Apply power to the test equipment and allow 15 minutes for warmup.

(5) Perform (6) through (9) below for the following receiver and signal generator frequencies at the signal generator level specified:

Band	Frequency MHz	Signal Generator Level, Microvolts
1	24	80
1	35	60
1	46	50
2	60	40
2	100	30
2	140	30

(6) Adjust the signal generator for 1 kHz, 30 percent modulation at the level specified in (5) above.

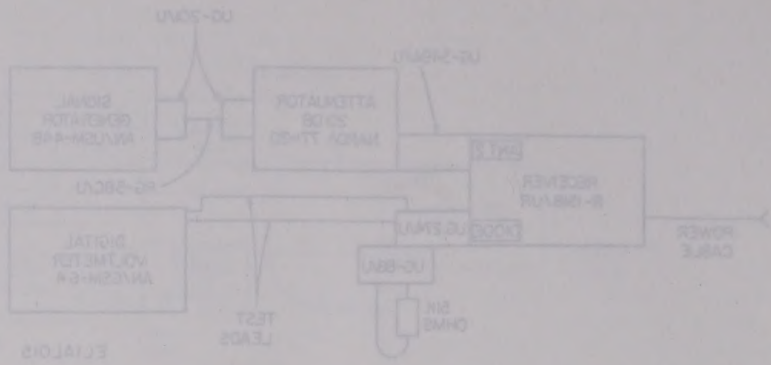

Figure 6-7. Diode output test connections.

(2) Set the receiver controls as follows:

Control	Setting
BAND	2
ANT	2
BANDWIDTH	10 kHz
RF GAIN	Maximum clockwise (no AVC)
FUNCTION	AM
TUNE	100 MHz

(4) Apply power to the test equipment and allow 15 minutes for warmup.

(5) Adjust the signal generator for 100 MHz with 1 kHz, 30 percent modulation and a level of 12 microvolts.

(6) Adjust the receiver TRIM control for a peak indication on the digital voltmeter.

(7) Observe that the digital voltmeter indicates 2 volts dc or greater. The voltage should be negative with respect to ground.

(8) Remove the power from the receiver and disconnect the test setup.

1. AM Whip Sensitivity Test.

(1) Perform of (1) above.

(2) Connect the test equipment as shown in figure 6-8.

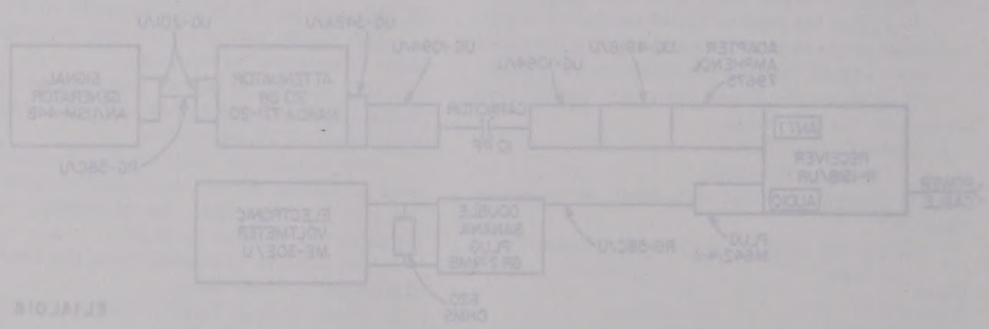

Figure 6-8. AM whip sensitivity test connections.

(3) Set the receiver controls as follows:

Control	Setting
ANT	1
BANDWIDTH	10 kHz
RF GAIN	Maximum clockwise (no AVC)
FUNCTION	AM

(4) Apply power to the test equipment and allow 15 minutes for warmup.

(5) Perform (6) through (9) below for the following receiver and signal generator frequencies at the signal generator level specified:

Band	Frequency MHz	Signal Generator Level, Microvolts
1	24	50
1	35	60
1	40	50
2	50	40
2	100	30
2	140	20

(6) Adjust the signal generator for 1 kHz, 30 percent modulation at the level specified in (5) above.

(7) Adjust the receiver TRIM control for a peak indication on the electronic voltmeter.

(8) Adjust the receiver VOL control for a 2.45-volt indication on the electronic voltmeter.

(9) Turn the signal generator modulation off. The electronic voltmeter should indicate 0.775 volts or less.

(10) Remove the power from the receiver and disconnect the test setup.

m. Agc Characteristic Test.

(1) Perform *a*(1) above.

(2) Connect the test equipment as shown in figure 6-1.

(3) Set the receiver controls as follows:

Control	Setting
BAND	2
TUNE	100 MHz
BANDWIDTH	10 Hz
RF GAIN	AVC
ANT	2
FUNCTION	AM

(4) Apply power to the test equipment and allow 15 minutes for warmup.

(5) Adjust the signal generator for 100 MHz with 1 kHz, 30 percent modulation at a level of 2.5 microvolts.

(6) Adjust the receiver TRIM control for a peak indication on the electronic voltmeter.

(7) Adjust the receiver VOL control for a 0.775 volt indication on the electronic voltmeter.

(8) Adjust the signal generator level to 500 millivolts. The electronic voltmeter should indicate 2.45 volts or less.

(9) Remove the power from the receiver and disconnect the test setup.

6-14. Radio Assembly (A1A1) Adjustments

a. IF Amplifier Gain.

(1) Perform the preliminary test setup of paragraph 6-12.

(2) Connect the test equipment as shown in figure 6-9.

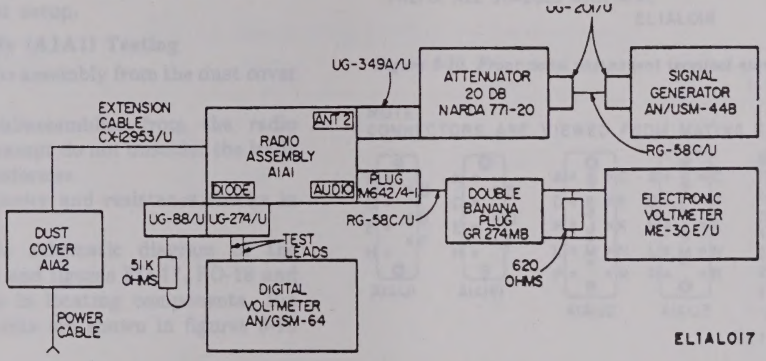

Figure 6-9. IF amplifier gain adjustment connections.

(3) Set the receiver controls as follows:

Control	Setting
ANT	2
BAND	1
TUNE	52.5 MHz
BANDWIDTH	10 kHz
RF GAIN	Maximum clockwise (no AVC)
VOL	Maximum clockwise
FUNCTION	AM

(4) Apply power to the test equipment and allow 15 minutes for warmup.

(5) Adjust the signal generator for 52.5 MHz with 1 kHz, 30 percent modulation at a level of 12 microvolts.

(6) Adjust IF amplifier potentiometer A1A1A3R8 (fig. FO-20) for an indication of —3 volts dc on the digital voltmeter. The electronic voltmeter should indicate 4.0 volts or greater. If it does not, adjust the potentiometer for an indication of 4.0 volts on the electronic voltmeter.

(7) Remove the modulation from the signal generator and reduce the level to 4 microvolts.

(8) Place the FUNCTION switch in the CW position.

(9) Vary the frequency of the signal generator slightly for a peak indication on the electronic voltmeter. The electronic voltmeter must indicate 3.5 volts or greater. If it does not, adjust potentiometer A1A1A3R8 for a 3.5 volt indication on the electronic voltmeter.

(10) Remove the power from the receiver and disconnect the test setup.

b. Signal Meter Adjustment.

(1) Perform the preliminary test setup of paragraph 6-12.

(7) Adjust the receiver TRIM control for a peak indication on the electronic voltmeter.

(8) Adjust the receiver VOL control for a 2.45-volt indication on the electronic voltmeter.

(9) Turn the signal generator modulation off. The electronic voltmeter should indicate 0.775 volts or less.

(10) Remove the power from the receiver and disconnect the test setup.

m. Age Characteristic Test.

(1) Perform *a*(1) above.

(2) Connect the test equipment as shown in figure 6-1.

(3) Set the receiver controls as follows:

Control	Setting
BAND	2
TUNE	100 MHz
BANDWIDTH	10 kHz
RF GAIN	AVC
ANT	2
FUNCTION	AM

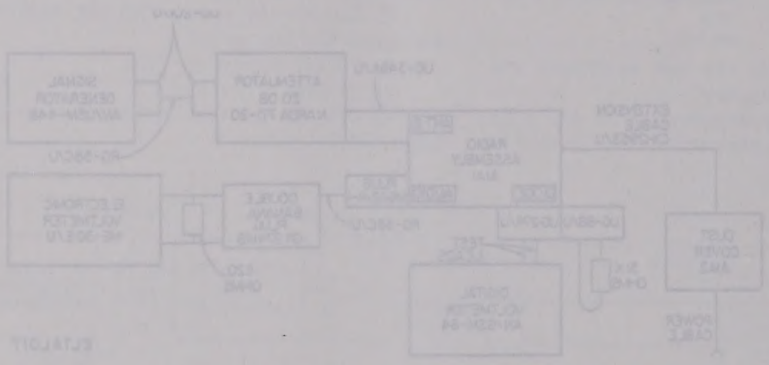

Figure 6-8. RF amplifier gain adjustment connections.

(4) Apply power to the test equipment and allow 15 minutes for warmup.

(5) Adjust the signal generator for 25.6 MHz with 1 kHz, 30 percent modulation at a level of 12 microvolts.

(6) Adjust RF amplifier potentiometer A1A1A2R9 (fig. 6-20) for an indication of −3 volts dc on the signal voltmeter. The electronic voltmeter should indicate 4.0 volts or greater. If it does not, adjust the potentiometer for an indication of 4.0 volts on the electronic voltmeter.

(7) Remove the modulation from the signal generator and reduce the level to 4 microvolts.

(8) Place the FUNCTION switch in the CW position.

(9) Vary the frequency of the signal generator slightly for a peak indication on the electronic voltmeter. The electronic voltmeter must indicate 5.6 volts or greater. If it does not, adjust potentiometer A1A1A2R8 for a 5.6 volt indication on the electronic voltmeter.

(10) Remove the power from the receiver and disconnect the test setup.

b. Signal Meter Adjustment.

(1) Perform the preliminary test setup of paragraph 6-12.

(2) Connect the test equipment as shown in figure 6-1 except the receiver will be removed from the dust cover and connected, using the extension cable (part of the accessory kit).

(3) Set the receiver controls as follows:

Control	Setting
ANT	2
BAND	1
TUNE	52 MHz
BANDWIDTH	10 kHz
RF GAIN	AVC
FUNCTION	AM

(4) Apply power to the test equipment and allow 15 minutes for warmup.

(5) Adjust the signal generator for 52 MHz with 1 kHz, 30 percent modulation at a level of 500 millivolts.

(6) Adjust detector assembly potentiometer A1A1A4R14 (fig. FO-20) for full scale deflection on the receiver signal meter A1A1A1M1.

(7) Remove the power from the receiver and disconnect equipment setup.

6-15. Radio Assembly (A1A1) Testing

a. Remove the radio assembly from the dust cover (para 6-6).

b. Remove the subassemblies from the radio assembly (para 6-6) except do not unsolder the leads from the power transformer.

c. Make the continuity and resistance checks in table 6-3 as follows:

(1) Refer to the schematic diagram of the receiver, figure FO-2 and figures FO-17, FO-18 and FO-19 for assistance in locating components. Pin numbers on components are shown in figures 6-10 and 6-11.

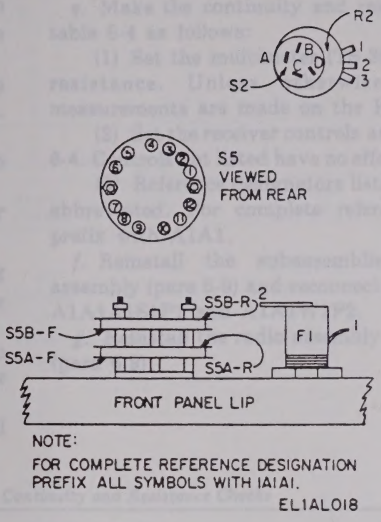

Figure 6-10. Front panel component terminal numbering.

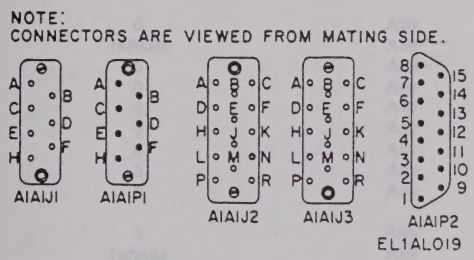

Figure 6-11. Connector pin numbering.

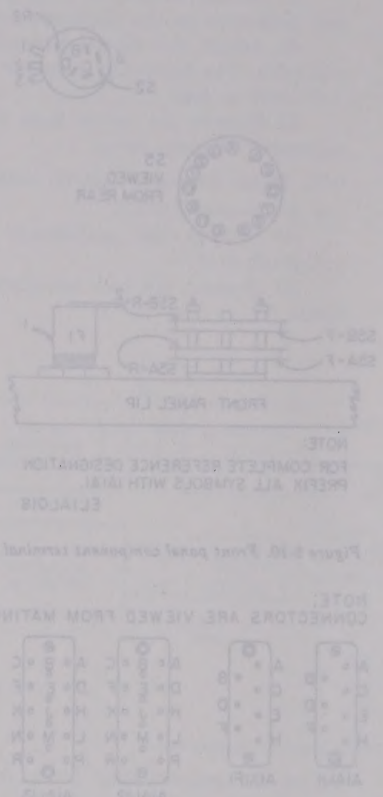

(2) Set the multimeter (TS-352/U) to measure resistance. Unless otherwise specified, all measurements are made on the RX1 scale.

(3) Set the receiver controls as specified in table 6-3. Controls not listed have no effect on the tests.

(4) Reference designators listed in table 6-3 are abbreviated. For complete reference designation, prefix with A1A1.

d. Reinstall the subassemblies in the radio assembly (para 6-9).

e. Reinstall the radio assembly in the dust cover (para 6-9).

6-16. Control Panel Assembly (A1A1A1) Testing

a. Remove the radio assembly from the dust cover (para 6-6).

b. Remove the subassemblies from the radio assembly (para 6-6) except do not remove the power transformer.

c. Uncouple the connectors at A1A1A1S1P1 and A1A1W1P2.

d. Refer to the schematic diagram of the receiver, figure FO-2 and figure 6-10 for assistance in locating components and pin numbers.

e. Make the continuity and resistance checks in table 6-4 as follows:

(1) Set the multimeter (TS-352/U) to measure resistance. Unless otherwise specified, all measurements are made on the RX1 scale.

(2) Set the receiver controls as specified in table 6-4. Controls not listed have no effect on test.

(3) Reference designators listed in table 6-4 are abbreviated. For complete reference designation, prefix with A1A1.

f. Reinstall the subassemblies in the radio assembly (para 6-9) and reconnect the connectors at A1A1A1S1P1 and A1A1W1P2.

g. Reinstall the radio assembly in the dust cover (para 6-9).

Table 6-3. Radio Assembly Continuity and Resistance Checks

Multimeter (+) Lead	Multimeter (−) Lead	Reading (ohms)	Control setting
a. Rf tuner (A2A1)			
W2-P1	W2-J1	0	Any
W2-P1 shield	W2-J1	Infinite	Any
W2-P1 shield	W2-J1 shield	0	Any
P1-A	A1S5B-F11	0	Any
P1-C	A2E3	0	Any
P1-E	J1-H	0	Any
P1-E	A1S2A-A	0	Any
P1-F	A2E6	0	Any
P1-H	A2E4	0	Any
b. If. amplifier (A3)			
W3-J1	W3-J2	0	Any
W3-J1 shield	W3-J2	Infinite	Any
W3-J1 shield	W3-J2 shield	0	Any
J1-A	A2E4	0	Any
J1-B	A2E6	0	Any
J1-C	A1R2-3	0	Any
c. Detector (A4)			
J2-A	A1J3	0	Any
J2-B	A1R1-2	0	Any
J2-C	A2E6	0	Any
J2-D	A1S5B-F6	0	Any
J2-E	A1S5B-F4	0	Any
J2-F	A1S3	0	Any
J2-H	A1S2A-B	0	Any
J2-J	A1S5B-F2	0	Any
J2-K	A1S5B-F10	0	Any
J2-L	A1S5B-F3	0	Any
J2-M	A1J1	0	Any
J2-N	A2E4	0	Any
J2-P	A2E3	0	Any
J2-R	A1J2	0	Any
d. Power supply (A5)			
J3-A	A1T1-6	0	Any
J3-B	A1S3	0	Any
J3-C	A2E3	0	Any
J3-D	A2E6	0	Any

Table 6-3. Radio Assembly Continuity and Resistance Checks—Continued

Multimeter (+) Lead	Multimeter (—) Lead	Reading (ohms)	Control setting
J3-E	A2E4	0	Any
J3-F	A1P2-11	0	Any
J3-K	A1S5B-R8	0	Any
J3-P	A1T1-5	0	Any

Table 6-4. Front Panel Assembly Continuity and Resistance Checks

Multimeter (+) Lead	Multimeter (—) Lead	Reading (ohms)	Control setting
a. *Antenna switch (A1S1)*			
A1S1J1	A1S1P1	0	A1S1 to 1
A1S1J1	A2E6	Infinite	A1S1 to 1
A1S1J2	A1S1P1	0	A1S1 to 2
A1S1J2	A2E6	Infinite	A1S1 to 2
A1S1J2	A1S1J1	Infinite	Any
b. *TRIM (A1C1)*			
A1C1J1	W1P2	0	Any
A1C1J1	A2E6	Infinite	Any
c. *Control panel connector (A1P2)*			
A1P2-3	A1F1-1	0	Any
A1P2-3	A1E3	Infinite	Any
A1P2-15	A1F1-2	0	Any
A1P2-15	A1E3	Infinite	Any
A1P2-1	A1J3	0	Any
A1P2-1	A1J3-GND	Infinite	Any
A1P2-2	A2E6	0	Any
A1P2-4	A1S5B-R3	0	Any
A1P2-8	A1J2	0	Any
A1P2-8	A1E2	Infinite	Any
A1P2-9	A1S2B-C	0	Any
A1P2-9	A1E1	Infinite	Any
A1P2-10	A1S4	0	Any
A1P2-12	A2E6	0	Any
A1P2-13	A1S5B-R9	0	Any
d. *RF GAIN (A1R2)*			
A1R2-2	A1S2A-A	0	A1R2 counterclockwise
A1R2-3	A1E3	4K to 6K	A1R2 counterclockwise (RX100)
A1R2-2	A1E2	4K to 6K	A1R2 to AVC (RX100)
A1S2A-A	A1S2A-B	0	A1R2 to AVC
A1S2A-B	A1S2B-D	Infinite	Any
e. *VOL (A1R1)*			
A1S5B-F1	A1E3	8K to 12K	Any (RX1000)
A1R1-2	A1E3	8K to 12K	A1R1 clockwise (RX1000)
f. *Meter (A1M1)*			
A1M1+	A1S3	0	Any
A1M1-	A1E3	0	Any
g. *Power check (A1S3)*			
A1S3-COM	A1S3-ON	0	A1S3 (not depressed)
A1S3-COM	A1D3-MOMENTARY	0	A1S3 to PWR CHK
h. *LITE switch (A1S4)*			
A1DS1-1	A2E3	0	A1S4 to M-ON
A1DS1-2	A2E6	0	Any
A1DS1-1	A1P2-10	0	A1S4 to ON
i. *FUNCTION (A1S5)*			
A1P2-4	A2E3	0	A1S5 to FM, AM, CW & CAL
A1P2-13	A1S5B-R8	0	A1S5 to FM, AM, CW & CAL
A1S5B-F7	A2E4	0	Any
A1S5B-F1	A1S5B-F2	0	A1S5 to FM
A1S5B-F-6	A1S5B-F7	0	A1S5 to FM
A1S5B-F-1	A1S5B-F3	0	A1S5 to AM
A1S5B-F1	A1S5B-F4	0	A1S5 to CW
A1S5B-F7	A1S5B-F10	0	A1S5 to CW

Table 6-4. Front Panel Assembly Continuity and Resistance Checks—Continued

Multimeter (+) Lead	Multimeter (−) Lead	Reading (ohms)	Control setting
A1S5B-F1	A1S5B-F4	0	A1S5 to CAL
A1S5B-F7	A1S5B-F10	0	A1S5 to CAL
A1S5B-F7	A1S5B-F11	0	A1S5 to CAL

6-17. Gear and Tuner Assembly (A1A1A2) Testing

a. Low Pass Filter.

(1) Fabricate the low pass filter shown in figure 6-12, using the materials listed in the Tool and Test Equipment List (app B).

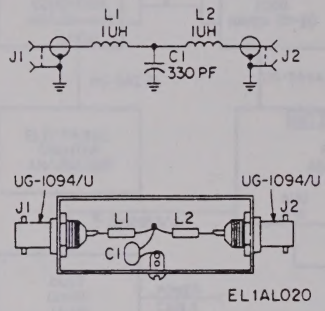

Figure 6-12. Low pass filter fabrication.

(2) Test the low pass filter as follows:

(*a*) Connect the test equipment as shown in figure 6-13 with the signal generator connected directly to the electronic voltmeter, using the jumper wire as shown.

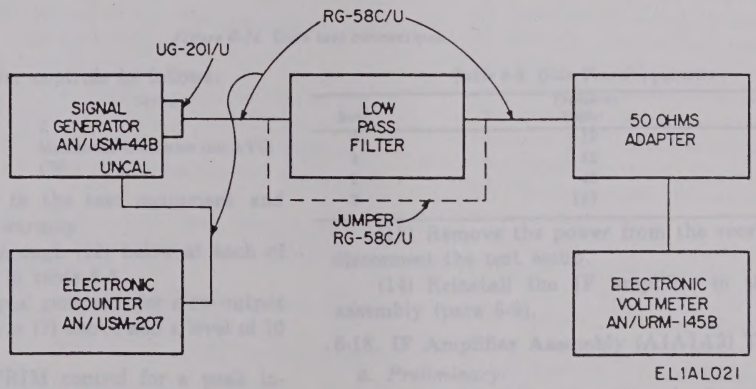

Figure 6-13. Low pass filter test connections.

(*b*) Apply power to the test equipment and allow 125 minutes for warmup.

(*c*) Adjust the signal generator for a 10 MHz CW output at a level of 0 dbm as indicated on the electronic voltmeter.

(*d*) Remove the jumper wire from the test setup without disturbing the signal generator controls.

(*e*) The electronic voltmeter should indicate −1 dbm or greater.

(*f*) Adjust the level of the signal generator for a 0 dbm indication on the electronic voltmeter with the low pass filter in the test setup. Maintain this level at the signal generator output for the remainder of the test.

(*g*) Adjust the signal generator frequency to 15 MHz. The electronic voltmeter should indicate −3 dbm or less.

(*h*) Adjust the signal generator frequency to

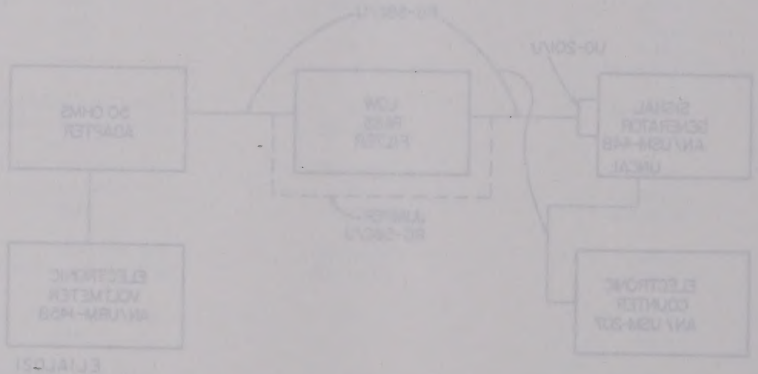

23 MHz. The electronic voltmeter should indicate −20 dbm or greater.

(*i*) Adjust the signal generator frequency to 50 MHz. The electronic voltmeter should indicate −40 dbm or less.

b. Gain Test.

(1) Remove the receiver from the dust cover (para 6-6).

(2) Remove IF amplifier A1A1A3 (para 6-6).

(3) Perform the preliminary test setup (para 6-12).

(4) Connect the test equipment as shown in figure 6-14.

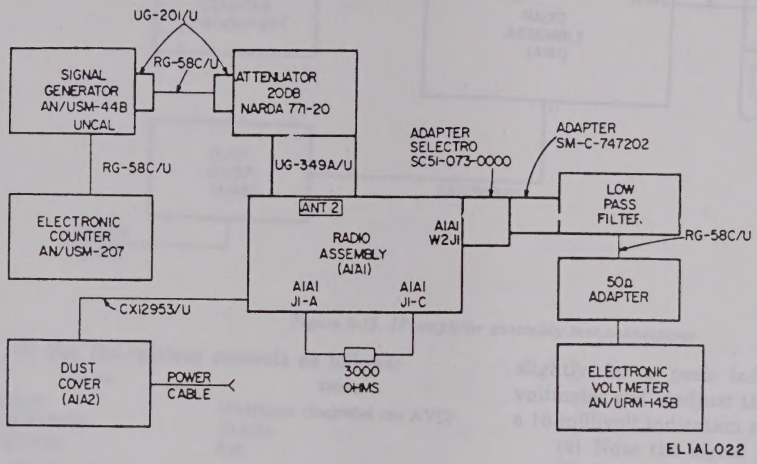

Figure 6-14. Gain test connections.

(5) Set the receiver controls as follows:

Control	Setting
ANT	2
RF GAIN	Maximum clockwise (no AVC)
FUNCTION	CW

(6) Apply power to the test equipment and allow 15 minutes for warmup.

(7) Perform (8) through (12) below at each of the frequencies listed in table 6-5.

(8) Adjust the signal generator for a cw output at the frequency given in (7) above and a level of 10 millivolts.

(9) Adjust the TRIM control for a peak indication on the electronic voltmeter.

(10) Observe that the electronic voltmeter indicates the voltage listed in table 6-5.

(11) Adjust the RF GAIN control fully counterclockwise. The electronic voltmeter should indicate less than 1.0 millivolt.

(12) Adjust the RF GAIN control fully clockwise.

Table 6-5. Gain Test Frequencies

Band	Frequency (MHz)	Output (millivolts)
1	19	10
1	52	6
2	48	16
2	157	6

(13) Remove the power from the receiver and disconnect the test setup.

(14) Reinstall the IF amplifier in the radio assembly (para 6-9).

6-18. IF Amplifier Assembly (A1A1A3) Testing

a. Preliminary.

(1) Remove the receiver from the dust cover and remove detector assembly (A1A1A4) (para 6-6).

(2) Disconnect connector A1A1W2P1 from the rf tuner motherboard.

(3) Perform the preliminary test setup (para 6-12).

(4) Connect the test equipment as shown in figure 6-15.

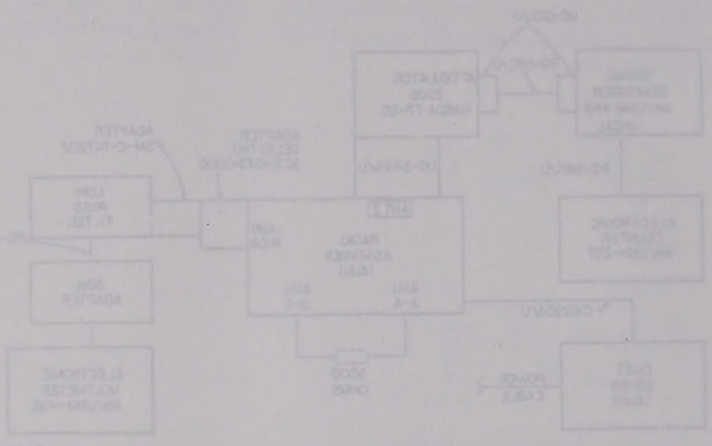

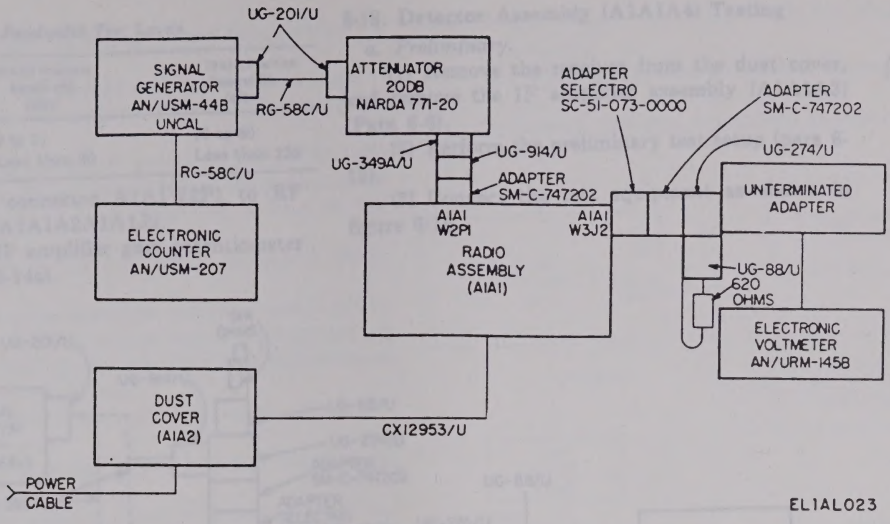

Figure 6-15. IF amplifier assembly test connections.

(5) Set the receiver controls as follows:

Control	Setting
RF GAIN	Maximum clockwise (no AVC)
BANDWIDTH	10 kHz
FUNCTION	FM

(6) Apply power to the test equipment and allow 15 minutes for warmup.

b. Voltage Gain and Agc Test.

(1) Adjust the signal generator for a CW output at 10.7 MHz and a level of 1.0 millivolt.

(2) Adjust the signal generator frequency slightly for a peak indication on the electronic voltmeter.

(3) Adjust IF amplifier gain potentiometer A1A1A3R8 (fig. FO-20) for maximum indication on the electronic voltmeter.

(4) Observe that the electronic voltmeter indicates a minimum of 100 millivolts.

(5) Turn the receiver RF GAIN control fully counterclockwise.

(6) Increase the signal generator level to 100 millivolts.

(7) Observe that the electronic voltmeter indicates 10 millivolts or less.

c. Bandwidth Test.

(1) Turn the receiver RF GAIN control fully clockwise (no AVC).

(2) Adjust the signal generator level for a 10-millivolt indication on the electronic voltmeter.

(3) Adjust the signal generator frequency slightly for a peak indication on the electronic voltmeter and readjust the signal generator level for a 10-millivolt indication on the electronic voltmeter.

(4) Note the signal generator level.

(5) Increase the signal generator level by 6 db.

(6) Increase the signal generator frequency until the electronic voltmeter indicates 10 millivolts. Note the signal generator frequency.

(7) Decrease the signal generator frequency until the electronic voltmeter indicates 10 millivolts. Note the signal generator frequency.

(8) Compute the difference between the frequencies noted in (6) and (7) above.

(9) The difference frequency should be within the limits specified, in table 6-6 for the 6-db bandwidth.

(10) Increase the signal generator level 60 db above that noted in (4) above.

(11) Repeat (6) (7) and (8) above.

(12) The difference frequency should be within the limits specified in table 6-6 for the 60-db bandwidth.

(13) Turn the receiver BANDWIDTH switch to 75 kHz.

(14) Repeat (1) through (12) above.

(15) Remove the power from the receiver and disconnect the test setup.

(16) Install detector assembly (A1A1A4) per paragraph 6-9).

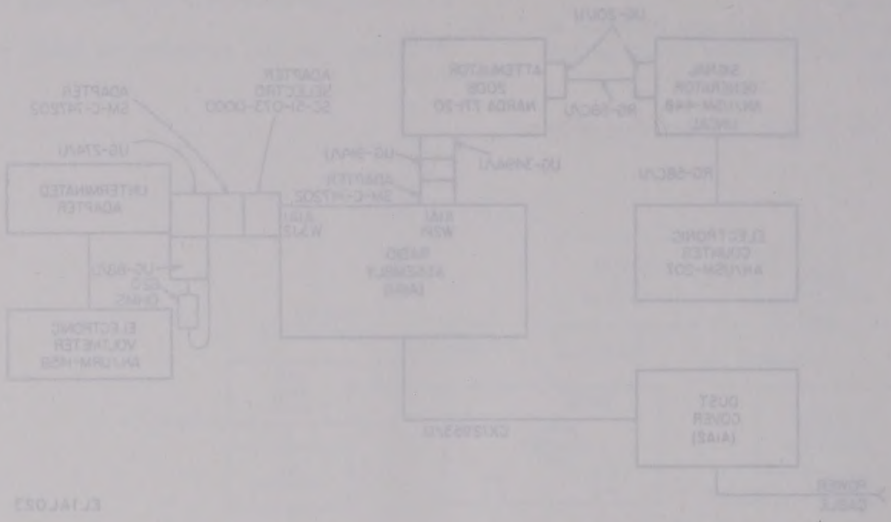

Figure 6-15. IF amplifier assembly test connections.

Table 6-6. Bandwidth Test Levels

Level Above Reference (db)	10 kHz Position Bandwidth (kHz)	75 kHz Position Bandwidth (kHz)
6	9 to 11	70 to 80
60	Less than 30	Less than 225

(17) Reconnect connector A1A1W2P1 to RF tuner motherboard A1A1A2A1A1J2.

(18) Readjust IF amplifier gain potentiometer A1A1A3R8 (para. 6-14*a*).

6-19. Detector Assembly (A1A1A4) Testing

a. Preliminary.

(1) Remove the receiver from the dust cover, and remove the IF amplifier assembly (A1A1A3) (Para 6-6).

(2) Perform the preliminary test setup (para 6-12).

(3) Connect the test equipment as shown in figure 6-16.

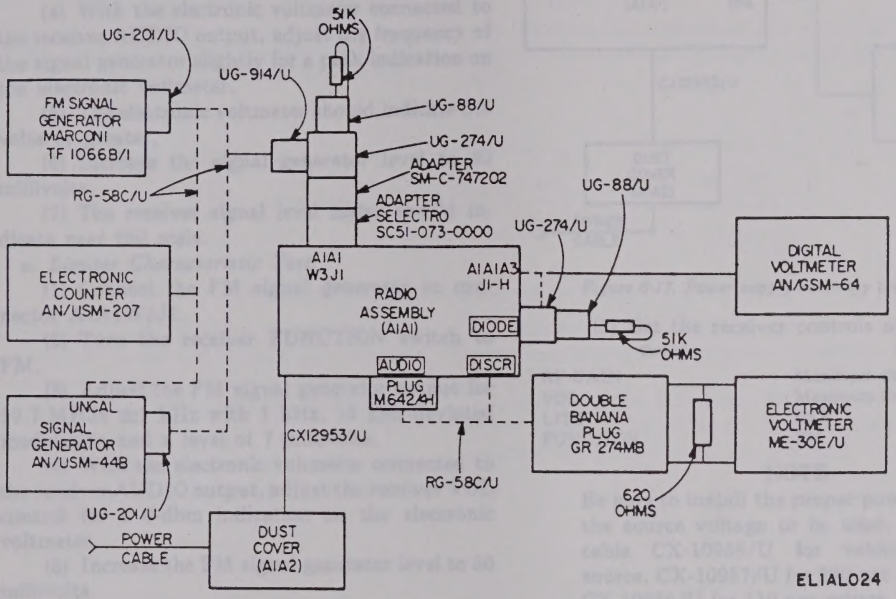

Figure 6-16. Detector assembly test connections.

(4) Set the receiver controls as follows:

Control	Setting
RF GAIN	AVC
FUNCTION	As required
VOL	As required

(5) Apply power to the test equipment and allow 15 minutes for warmup.

b. Fm Audio and Discriminator Output Test.

(1) Turn and receiver FUNCTION switch to FM.

(2) With the fm signal generator connected in the test setup, adjust the generator output for 10.7 MHz ±1 kHz with 1 kHz, 15 kHz deviated modulation and a level of 7.0 millivolts.

(3) Turn the receiver VOL control fully clockwise (no AVC).

(4) When measured at the receiver AUDIO output, the electronic voltmeter should indicate 3.5 volts or greater.

(5) When measured at the DISCR output the electronic voltmeter should indicate 50 millivolts or greater.

c. Am. Audio and Diode Output Test.

(1) Turn the receiver FUNCTION switch to AM.

(2) With the signal generator (AN/USM-44B) connected in the test setup, adjust the generator output for 10.7 MHz ±1 kHz with 1 kHz, 30 percent modulation and a level of 9.0 millivolts.

(3) Turn the receiver VOL control fully clockwise.

(4) When measured at the receiver AUDIO output, the electronic voltmeter should indicate 3.5 volts or greater.

(5) When measured at the receiver DIODE output, the digital voltmeter should indicate 2.0

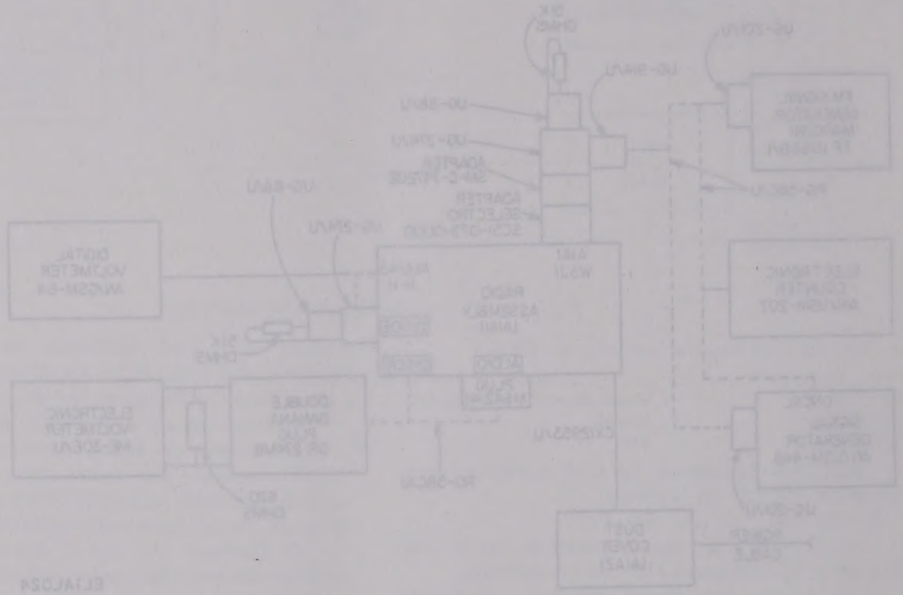

volts or greater. The voltage should be negative with respect to ground.

d. CW Audio Output and Signal Meter Test.

(1) Turn the receiver FUNCTION switch to CW.

(2) With the signal generator (AN/USM-44B) connected in the test setup, adjust the generator for a CW output at 10.7 MHz and a level of 3.0 millivolts.

(3) Turn the receiver VOL control fully clockwise.

(4) With the electronic voltmeter connected to the receiver AUDIO output, adjust the frequency of the signal generator slightly for a peak indication on the electronic voltmeter.

(5) The electronic voltmeter should indicate 3.5 volts or greater.

(6) Increase the signal generator level to 30 millivolts.

(7) The receiver signal level meter should indicate near full scale.

e. Limiter Characteristic Test.

(1) Connect the FM signal generator to connector A1A1W3J1.

(2) Turn the receiver FUNCTION switch to FM.

(3) Adjust the FM signal generator output for 10.7 MHJz ±1 kHz with 1 kHz, 15 kHz-deviated modulation and a level of 7 millivolts.

(4) With the electronic voltmeter connected to the receiver AUDIO output, adjust the receiver VOL control for a 0-dbm indication on the electronic voltmeter.

(5) Increase the FM signal generator level to 50 millivolts.

(6) The electronic voltmeter should indicate 0 dbm ±3db.

f. Agc Characteristic Test.

(1) Turn the receiver FUNCTION switch to AM.

(2) With the signal generator (AN/USM-44B) connected in the test setup, adjust the signal generator output for 10.7 MHz ±1 kHz with 1 kHz, 30 percent modulation and a level of 0.5 microvolt.

(3) When measured at pin H of connector A1A1A3J1, the digital voltmeter should indicate 7 volts dc or greater.

(4) Increase the signal generator level to 30 millivolts.

(5) The digital voltmeter should indicate 2 volts dc or less.

(6) Remove the power from the receiver and disconnect the test setup.

(7) Install the IF amplifier assembly (A1A1A3) in the receiver (para 6-9).

6-20. Power Supply Assembly (A1A1A5) Testing

a. Preliminary.

(1) Perform the preliminary test setup (para 6-12).

(2) Connect the test equipment as shown in figure 6-17.

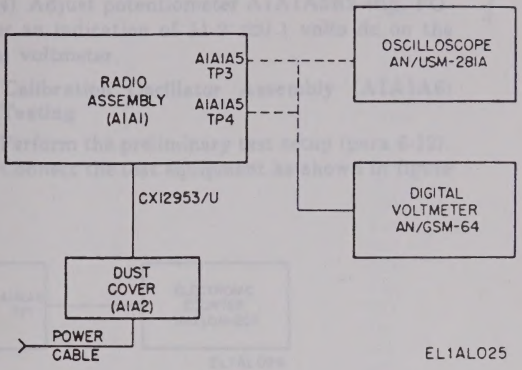

Figure 6-17. Power supply assembly test connections.

(3) Set the receiver controls as follows:

Control	Setting
RF GAIN	Maximum clockwise (no AVC)
VOL	Maximum clockwise
LITE	OFF
FUNCTION	FM

NOTE

Be sure to install the proper power cable for the source voltage to be used. Use power cable CX-10958/U for vehicular power source, CX-10957/U for 220-vac source, and CX-10956/U for 110-vac source. The ac test and voltage adjustment in this section may be performed, using either 110 vac or 220 vac, 50-Hz to 400-Hz power.

b. Ac Operation Test.

(1) With the digital voltmeter connected to test point TP3, the voltmeter should indicate 16 to 19 volts dc.

(2) With the digital voltmeter connected to test point TP4, the voltmeter should indicate 11.2 ±0.1 volts dc.

(3) With the oscilloscope connected to test point TP3, the ripple at the power source frequency should not exceed 60 millivolts peak-to-peak.

c. Vehicular Operation Test.

(1) With the digital voltmeter connected to test point TP3, the voltmeter should indicate 16 to 19 volts dc.

(2) With the digital voltmeter connected to test

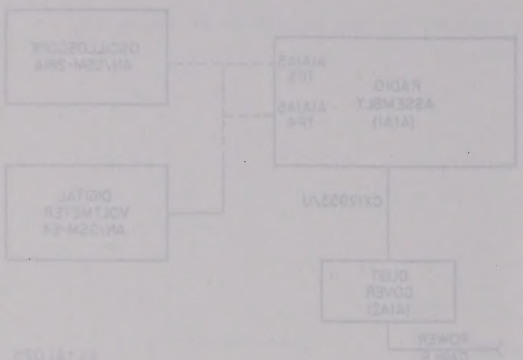

point TP4, the voltmeter should indicate 11.2 ±0.1 volts dc.

d. Battery Operation Test.

(1) Remove the power cable from the dust cover (A1A2).

(2) Install twelve fresh BA-30/U cells in the battery compartment (para 2-5*a*).

(3) Place the INT-EXT switch on the dust cover (A1A2) in the INT position.

(4) Press the PWR CHK switch on the receiver front panel. The panel meter should indicate in the green portion of the scale.

(5) With the digital voltmeter connected to test point TP4, the voltmeter should indicate 11.2 ±0.1 volts dc.

e. 11.2-Volt Adjustment.

(1) Connect the receiver for ac operation.

(2) Be sure that the INT-EXT switch on the dust cover (A1A2) is in the EXT position.

(3) Connect the digital voltmeter to test point TP4.

(4) Adjust potentiometer A1A1A5R2 (fig. FO-20) for an indication of 11.2 ±0.1 volts dc on the digital voltmeter.

6-21. Calibration Oscillator Assembly (A1A1A6) Testing

a. Perform the preliminary test setup (para 6-12).

b. Connect the test equipment as shown in figure 6-18.

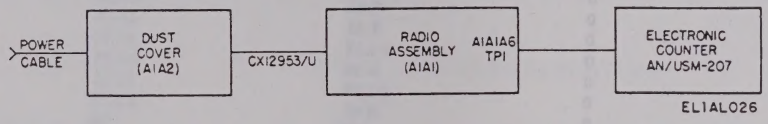

Figure 6-18. Calibration oscillator test connections.

c. Set the receiver FUNCTION control to CAL.

d. Apply power to the test equipment and allow 15 minutes for warmup.

e. The electronic counter should indicate 2.0 MHz ±100 Hz.

6-22. Dust Cover Assembly (A1A2) Testing

a. Remove the radio assembly from the dust cover (para 6-6).

b. Loosen filter FL1 in the dust cover by removing the four mounting screws and the terminal cover.

c. Refer to the schematic diagram of the dust cover, figures FO-3, 6-19 and FO-16 for assistance in locating components and pin numbers.

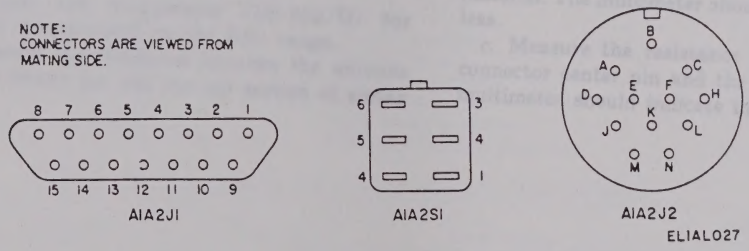

Figure 6-19. Dust cover connector and switch pin numbering.

d. Make the continuity and resistance checks in table 6-7 as follows:

(1) Set the multimeter (TS-352/U) to measure resistance. Unless otherwise specified, all measurements are made on the RX1 scale.

(2) Set the dust cover controls as specified in table 6-7.

(3) Reference designators, listed in table 6-7, are abbreviated. For complete reference designation prefix with A1A2.

e. Reinstall filter FL1 and the terminal cover, using four screws.

f. Reinstall the radio assembly in the dust cover (para 6-9).

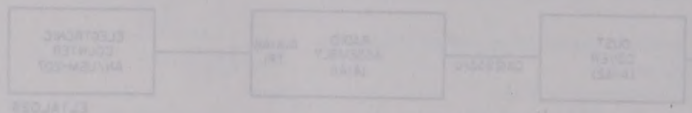

Table 6-7. Dust Cover Continuity and Resistance Checks

Multimeter (+ Lead	Multimeter (— Lead	Reading (ohms)	Control setting
J1-1	J2-M	0	Any
FL1-7	J2-J	0	Any
J1-3	FL1-6	0	Any
FL1-6	J2-L	0	Any
J1-4	S1-2	0	Any
J1-5	FL-4	0	Any
FL1-4	J2-C	0	Any
J1-6	FL1-3	0	Any
FL1-3	J2-H	0	Any
J1-7	FL1-2	0	Any
FL1-2	J2-B	0	Any
J1-8	J2-N	0	Any
J1-9	J2-D	0	Any
J1-10	S1-4	0	Any
J1-11	S1-1	0	Any
J1-12	FL1-7	0	Any
FL1-7	J2-F	0	Any
J1-13	J2-E	0	Any
J1-14	FL1-1	0	Any
FL1-1	J2-A	0	Any
J1-15	FL1-5	0	Any
FL1-5	J2-K	0	Any
E1	E2	15 Max	Any
E2	E1	15K Min	Any (RX1000)
E2	J1-4	0	S1 to INT
E2	J1-10	Infinite	S1 to INT
J1-4	J1-11	0	S1 to EXT
J1-4	J1-10	0	S1 to EXT
FL1-7	J1-14	Infinite	Any
FL1-7	J1-7	Infinite	Any
FL1-7	J1-6	Infinite	Any
FL1-7	J1-5	Infinite	Any
FL1-7	J1-15	Infinite	Any
FL1-7	J1-3	Infinite	Any

6-23. Antenna AS-2887/ UR Testing

a. Adjust the multimeter (TS-352/U) for resistance measurement on the RX1 range.

b. Measure the resistance between the antenna connector center pin and the top section of spring material. The multimeter should indicate 10 ohms or less.

c. Measure the resistance between the antenna connector center pin and the connector body. The multimeter should indicate infinity.

Multimeter (+) Lead	Multimeter (−) Lead	Reading (ohms)	Control Setting
J1-1	J2-M	0	Any
P1J-1	J2-J	0	Any
J1-2	P1J-3	0	Any
P1J-4	J2-L	0	Any
J1-4	S1-2	0	Any
J1-5	P1J-4	0	Any
P1J-5	J2-C	0	Any
J1-6	P1J-5	0	Any
P1J-6	J2-H	0	Any
J1-7	P1J-6	0	Any
P1J-6	J2-B	0	Any
J1-8	J2-K	0	Any
J1-9	J2-D	0	Any
J1-10	S1-4	0	Any
J1-11	S1-1	0	Any
J1-12	P1J-7	0	Any
P1J-7	J2-F	0	Any
J1-13	J2-E	0	Any
J1-14	P1J-1	0	Any
P1J-1	J2-A	0	Any
J1-15	P1J-2	0	Any
P1J-2	J2-K	0	Any
J1	J2	J2 Max	Any
J2	J1	J1R Min	Any (RX1000)
J2	J1-4	0	J1 to J2T
J2	J1-10	Infinite	J1 to J2T
J1-4	J1-11	0	J1 to J2T
J1-4	J1-10	0	J1 to J2T
P1J-7	J1-14	Infinite	Any
P1J-7	J1-7	Infinite	Any
P1J-7	J1-6	Infinite	Any
P1J-7	J1-5	Infinite	Any
P1J-7	J1-15	Infinite	Any
P1J-7	J1-3	Infinite	Any

CHAPTER 7

GENERAL SUPPORT MAINTENANCE

Section I. GENERAL

7-1. Scope of Maintenance

This chapter describes general support maintenance requirements for Receiving Set, Radio AN/URR-71. These requirements include subassembly troubleshooting, inspection, repair, testing, adjustment, and alignment. It should be noted that *intermediate* level repairs are performed by direct or general support, depending upon the complexity of the repair.

7-2. Tools and Test Equipment Required

All tools and test equipment required for general support maintenance are listed in the Maintenance Allocation Chart (app B).

Section II. TROUBLESHOOTING

7-3. General

This section contains procedures for isolating and localizing faulty circuits or components within the various subassemblies. These procedures normally are accomplished in conjunction with subassembly testing as described in paragraphs 7-10 through 7-23, or in paragraphs 6-3 and 6-4.

7-4. Troubleshooting Charts

Troubleshooting of the subassemblies is accomplished by systematically testing the subassembly inputs and outputs and by making other measurements at available test points. Tables 7-1 and 7-11 contain the subassembly troubleshooting procedures as follows:

Subassembly	*Name*	*Table*
A1A1A2	Gear and tuner assembly	7-1
A1A1A2A1A1A1	Motherboard	7-2
A1A1A2A1A2	RF preselector	7-3
A1A1A2A1A3	First RF amplifier	7-4
A1A1A2A1A4	Second RF amplifier	7-5
A1A1A2A1A5	Third RF amplifier	7-6
A1A1A2A1A6	Oscillator-mixer	7-7
A1A1A3	IF amplifier assembly	7-8
A1A1A4	Detector assembly	7-9
A1A1A5	Power supply assembly	7-10
A1A1A6	Calibration oscillator assembly	7-11

Table 7-1. Gear and Turner Assembly Troubleshooting

Item of check	Test conditions	Normal readings	Additional checks and remarks
Mechanical functioning.	Para 7-13*a*	No backlash and no binding.	
Electrical alignment.	Para 7-13*c*	Adjustable capacitors and coils have sufficient range.	
Electrical tests.	Para 7-13*b*	Para 7-13*b*	

Table 7-2. Motherboard Troubleshooting

Item of check	Test conditions	Normal readings	Additional checks and remarks
Continuity and resistance.	Para 7-14.	Table 7-14.	Broken or bent pins.

CHAPTER 7

GENERAL SUPPORT MAINTENANCE

Section I. GENERAL

7-1. Scope of Maintenance

This chapter describes general support maintenance requirements for Receiving Set, Radio AN/URR-71. These requirements include subassembly troubleshooting, inspection, repair, testing, adjustment, and alignment. It should be noted that maintenance level repairs are performed by direct or general support, depending upon the complexity of the repair.

7-2. Tools and Test Equipment Required

All tools and test equipment required for general support maintenance are listed in the Maintenance Allocation Chart (app. B).

Section II. TROUBLESHOOTING

7-3. General

This section contains procedures for isolating and localizing faulty circuits or components within the various subassemblies. These procedures normally are accomplished in conjunction with subassembly testing as described in paragraphs 7-10 through 7-25, or in paragraphs 8-3 and 8-4.

7-4. Troubleshooting Charts

Troubleshooting of the subassemblies is accomplished by systematically testing the subassembly inputs and outputs and by making other measurements as available test points. Tables 7-1 and 7-11 contain the subassembly troubleshooting procedures as follows:

Subassembly	Name	Table
A1A1A2	Oscillator assembly	7-1
A1A1A2A1A1	Motherboard	7-2
A1A1A2A1A2	RF preselector	7-3
A1A1A2A1A3	First RF amplifier	7-4
A1A1A2A1A4	Second RF amplifier	7-5
A1A1A2A1A5	Third RF amplifier	7-6
A1A1A2A1A6	Oscillator-mixer	7-7
A1A1A3	IF amplifier assembly	7-8
A1A1A4	Detector assembly	7-9
A1A1A5	Power supply assembly	7-10
A1A1A6	Calibration oscillator assembly	7-11

Table 7-1. Oscillator Assembly Troubleshooting

Item or check	Test conditions	Normal indication	Additional checks and remarks
Mechanical binding	Para 7-12e	No backlash and no binding	
Electrical alignment	Para 7-12c	Adjustable capacitors and rolls have sufficient range	
Electrical tests	Para 7-12d	Para 7-12d	

Table 7-2. Motherboard Troubleshooting

Item or check	Test conditions	Normal indication	Additional checks and remarks
Operability and resistance	Para 7-14c	Table 7-1a	Broken or bent pins

Table 7-3. RF Preselector Troubleshooting

Item of check	Test conditions	Normal readings	Additional checks and remarks
Continuity and resistance.	Para 7-15*a*.	Table 7-15.	Broken coil wires, coil slugs, glass trimmer capacitors.
Functional test.	Para 7-15*b*.	Para 7-15*b*.	

Table 7-4. First RF Amplifier Troubleshooting

Item of check	Test conditions	Normal readings	Additional checks and remarks
Continuity and resistance.	Para 7-16*a*.	Table 7-16.	Broken coil wires, coil slugs, glass trimmer capacitors.
Functional test.	Para 7-16*b*.	Para 7-16*b*.	Defective Q1.

Table 7-5. Second RF Amplifier Troubleshooting

Item of check	Test conditions	Normal readings	Additional checks and remarks
Continuity and resistance.	Para 7-17*a*.	Table 7-17.	Broken coil wires, coil slugs, glass trimmer capacitors.
Functional test	Para 7-17*b*.	Para 7-17*b*.	Defective Q1

Table 7-6. Third RF Amplifier Troubleshooting

Item of check	Test conditions	Normal readings	Additional checks and remarks
Continuity and resistance.	Para 7-18*a*.	Table 7-18.	Broken coil wires, coil slugs, glass trimmer capacitors.
Functional test.	Para 7-18*b*.	Para 7-18*b*.	Defective Q1.

Table 7-7. Oscillator-Mixer Troubleshooting

Item of check	Test conditions	Normal readings	Additional checks and remarks
Continuity and resistance.	Para 7-19*a*.	Table 7-19.	Broken coil wires, coil slugs, glass trimmer capacitors.
Functional test.	Para 7-19*b*.	Para 7-19*b*.	Defective Q1, Q2.

Table 7-8. IF Amplifier Assembly Troubleshooting

Item of check	Test conditions	Normal readings	Additional checks and remarks
Mechanical	Rotate shaft.	Switch actuator properly seated and all switches activate.	Bent or binding switch rod or activator.
Electrical alignment.	Para 7-20*b*.	Sufficient range in coils.	
Quiescent voltages.	Para 7-20*c*(2).	Table 7-20.	Defective U1, U2, Q1.
Dynamic voltages.	Para 7-20*c*.(3).	Table 7-21.	*a*. P3-C out of limits; defective R20. *b*. TP2 out of limits; defective Q1 circuit. *c*. C18, C21 junction out of limits; defective filter or switch. *d*. C8, C9 junction out of limits; defective U1 circuit. *e*. TP3 out of limits; defective U2 circuit.
Assembly tests.	Para 6-18	Para 6-18.	

Table 7-9. Detector Assembly Troubleshooting

Item of check	Test conditions	Normal readings	Additional checks and remarks
Assembly tests.	Para 6-19.	Para 6-19.	
Electrical alignment.	Para 7-21*b*.	Sufficient range in adjustable components.	
Quiescent voltages.	Para 7-21c(2).	Table 7-22.	Defective U1, U2, U3, U4, U5, Q1, Q2.
Dynamic voltages.	Para 7-21c(3)	Table 7-23.	*a*. TP2 out of limits; defective U1 circuit. *b*. TP6 out of limits; defective U2 or Q1 circuit. *c*. TP7 out of limits; defective U2 circuit. *d*. DIODE out of limits; defective U2 circuit. *e*. AUDIO out of limits; defective U2 or U5 circuit. *f*. TP4 out of limits; defective Q2 circuit. *g*. TP5 out of limits; defective U4 circuit. *h*. DISCR out of limits; defective U3 circuit. *i*. TP3 out of limits; defective U3 circuit.

Table 7-10. Power Supply Assembly Troubleshooting

Item of check	Test conditions	Normal readings	Additional checks and remarks
Assembly tests.	Para 6-20.	Para 6-20.	
Electrical alignment.	Para 7-22*b*.	Sufficient range in-potentiometer.	
115 vac voltage tests.	Para 7-22c(2).	Table 7-24.	*a*. TP1 out of limits; defective A1CR2 through A1CR5. *b*. TP3 out of limits; defective A2Q1 circuit. *c*. TP4 out of limits; defective A2U1, A2Q2 circuit.
Vehicular voltage	Para 7-22c(3).	Table 7-25.	*a*. TP1 out of limits; defective A1CR1 circuit. *b*. TP3 out of limits; defective A1Q1 circuit. *c*. TP4 out of limits; defective A2U1, A2Q2 circuit.

Table 7-11. Calibration Oscillator Assembly Troubleshooting

Item of check	Test conditions	Normal readings	Additional checks and remarks
Assembly tests.	Para 6-21.	Para 6-21.	
Voltage tests.	Para 7-23*b*(2).	Table 7-26.	

Section III. MAINTENANCE

7-5. General

This section describes general support corrective maintenance procedures for the receiver and the various subassemblies.

7-6. Disassembly of Receiver

NOTE

Refer to paragraph 6-6 for disassembly of the receiver to the subassembly level.

Disassemble the subassemblies only to the extent necessary to make repairs.

a. Disassembly of Radio Assembly (A1A1) (fig. FO-17).

(1) Remove the if. amplifier assembly, detector assembly, power supply assembly, calibration oscillator assembly, and power transformer (para 6-6).

(2) Remove the outside body of the main tuning knob (37) by pulling straight out from the front panel.

(3) Remove the internal tooth nylon gear by pulling straight out from the front panel.

(4) Remove nylon spur gear from shaft by loosening two setscrews.

NOTE

See *b* below for removal of remaining main tuning knob parts. Do not remove remaining knob parts at this assembly level.

(5) Remove the control panel assembly (A1A1A1) from the radio by removing three screws (38) and pulling the control panel off of the main tuning shaft.

(6) Unsolder and tag all wires on the control panel that come from the remainder of the radio and disconnect connector W1P1 (48) at the antenna trimmer connector J2.

(7) Remove three nuts and lockwashers securing the rear support bracket (41) to the tuner housing.

(8) Remove the four screws (32) and lockwashers secureing the main rib assembly to the gear casting.

(9) Complete the removal of the main rib assembly by removing the attaching hardware from connectors J1 (18), J2 (26), and J3 (17) and disconnecting cable W2 and connector P1 (18) from J3 on the rf tuner motherboard.

b. Disassembly of Control Panel Assembly (A1A1A1) (fig. FO-18).

(1) Tuning knob removal. Remove the remaining parts of the main tuning knob from the control panel by removing the waterproof nut (36, fig. FO-17).

(2) Remove the knobs from the remaining front panel controls.

(3) Unsolder and tag wiring from front panel controls, connectors, etc, which are to be removed.

(4) Remove front panel controls, connectors, indicators, etc., as required, by removing the attaching hardware.

(5) If required, replace lamp DS1 by removing the clear lens cap and pulling the lamp out of the socket. Install a new lamp in the socket and replace the lens cap.

c. Disassembly of Gear and Tuner Assembly (A1A1A2) (fig. FO-19).

(1) Dial tape removal:

(*a*) Remove the retainer spring that holds the tape in the sprocket gear by removing two screws.

(*b*) Remove the c rings from the spool posts.

(*c*) Remove the dial tape and spools from the spool posts.

(2) Remove the anti-blacklash gear (5) from the variable inductor (28) shaft by loosening the screw in the gear clamp (4).

(3) Loosen the bandswitch coupling (3) by loosening the setscrew (2) and the cap screw (10).

(4) Remove the gear housing assembly from the RF tuner assembly by removing three screws (6) and flat washers (7) and sliding the gear housing assembly off of the variable inductor shaft.

d. Disassembly of RF Tuner Assembly (A1A1A2A1) (fig. FO-19).

(1) Remove the cover (19) from the rf tuner (11) by removing six screws (18).

(2) Remove the RF tuner circuit card assemblies (13, 14, 15, 16, 17) by carefully pulling them out of the RF tuner.

e. Disassembly of Tuner Subassembly (A1A1A2A1A1) (fig. FO-19).

(1) Unsolder the lead from C1 and the jumper wire from E6 on the motherboard (24) to terminals J4 and J5 of the tuner subassembly (12).

(2) Remove the motherboard (24) and variable inductor (28) from the tuner subassembly by removing three screws (23), lockwashers (21), flat washers (22, 25) and nuts (26) that secure the motherboard to the tuner subassembly, and four screws (20) and washers (21, 22) that secure the variable inductor.

(3) Remove the variable inductor (28) from the motherboard (24) by unsoldering the ten variable inductor terminals from the motherboard.

f. Disassembly of IF Amplifier Assembly (A1A1A3) (fig. FO-17).

(1) Remove the IF assembly cover (5) by removing the four screws (7) and washers (6).

(2) Remove the four standoffs (8).

(3) Remove the circuit card assembly (9) and the switch actuator (2) by removing two screws (4) and washers (3) from the circuit card.

g. Disassembly of Detector Assembly (A1A1A4) (fig. FO-17).

(1) Remove the detector assembly cover (31) by removing the four screws (7) and washers (6).

(2) Remove the four standoffs (30).

(3) Remove the circuit card assembly (29) by removing the two screws (4) and washers (3) in the center of the circuit card.

h. Disassembly of Power Supply Assembly (A1A1A5) (fig. FO-17).

(1) Fold the power supply circuit card A1 (13) over to expose the wires connecting it to the regulator circuit card A2 (14).

(2) Unsolder and tag the wires from the regulator circuit card (A2).

i. Disassembly of Calibration Oscillator Assembly (A1A1A6) (fig. FO-17). Remove the circuit card assembly (45) by removing two screws (4) and flat washers (3).

7-7. Inspection

a. Inspect circuit cards and the interior of the radio assembly as outlined in paragraph 6-7.

b. Inspect the control panel controls, indicators, connectors, terminals, etc for dirt, corrosion, wear, breakage, or signs of overheating.

c. Inspect the gear and tuner assembly for the following deficiencies:

(1) Loose screws.
(2) Unsealed setscrews.
(3) Shafts that will not turn.
(4) Bent push rods.
(5) Gears not meshed and aligned.
(6) Bent or broken electrical contacts.
(7) Dirt or foreign matter present.

7-8. Replacement and Repair of Subassemblies and Circuit Cards

a. Subassembly Replacement. To replace a subassembly, follow the detailed instructions in paragraphs 6-6, 6-9, 7-6, and 7-9.

b. Circuit Card Repairs (fig. 7-1 through 7-11). Make repairs to circuit cards by accomplishing the following general parts replacement procedures:

(1) Remove attaching hardware as required to remove the defective part.

(2) Unsolder the part from the circuit card or unsolder the wiring from the part as applicable.

(3) Remove the part from the circuit card and replace with a serviceable part.

NOTE

See paragraph 7-8c for lead forming and mounting of reed switches on the RF tuner circuit cards.

(4) Use solder type SN60WRMAP2 to solder the component leads to the circuit card or connect the wiring to the component, as applicable, (MIL-STD-454 requirement 5).

WARNING

The fumes of trichloroethane are toxic. Provide thorough ventilation whenever used. DO NOT USE NEAR AN OPEN FLAME. Trichloroethane is not flammable, but exposure of the fumes to an open flame or hot metal forms highly toxic phosgene gas.

(5) Clean solder connections with trichloroethane and allow the circuit card to dry.

NOTE

Do not apply conformal coating over adjustment screws, under the card connector, around hardware, or over the components not previously coated. Do not apply conformal coating to any of the circuit cards in the RF tuner or to the motherboard circuit card.

(6) Apply conformal coating to the new component, the solder joints, and to the surrounding area, using a small paint brush. Apply the coating evenly to an approximate thickness of 0.001 to 0.006 inch.

(7) Allow the conformal coating to air cure at ambient temperature for 24 hours. This process can be speeded up by baking in accordance with MIL-STD-275.

c. Reed Switch Replacement (fig. 7-12 and 7-13). Magnetically activated reed switches are used as S1 and S2 on the following circuit card assemblies:

Preselector	A1A1A2A1A2
First RF Amplifier	A1A1A2A1A3
Second RF Amplifier	A1A1A2A1A4
Third RF Amplifier	A1A1A2A1A5
Oscillator-Mixer	A1A1A2A1A6

CAUTION

Use extreme care in forming and cutting the leads of the reed switch to avoid cracking or breaking the glass envelope. Use long-nose pliers to grip the lead next to the glass while forming the lead. Do not cut the leads until the switch has been soldered in the circuit card.

(1) Form the leads to the dimension shown (fig. 7-12).

(2) Insert the switch in the circuit card and solder (fig. 7-13).

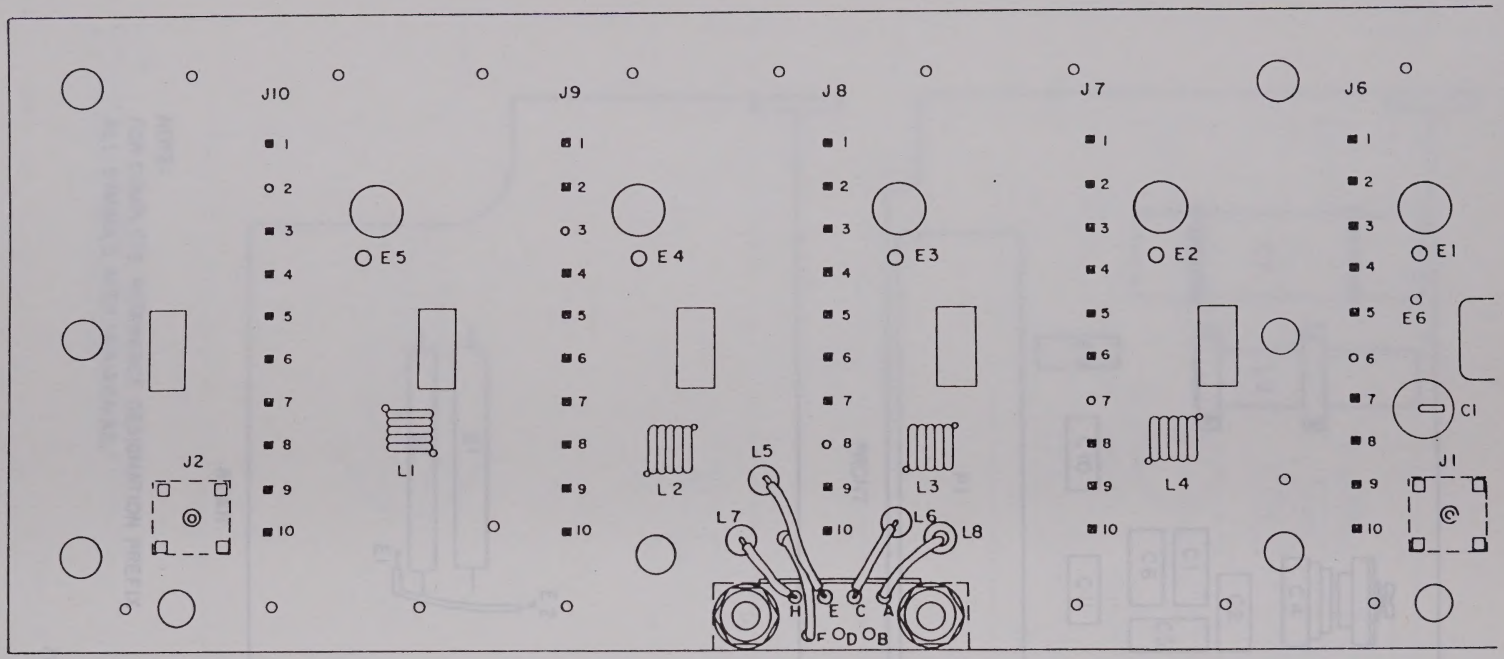

NOTE:
FOR COMPLETE REFERENCE DESIGNATION PREFIX
ALL SYMBOLS WITH 1A1A1A2A1A1A1. EL1AL02

Figure 7-1. Motherboard, A1A1A2A1A1A parts location.

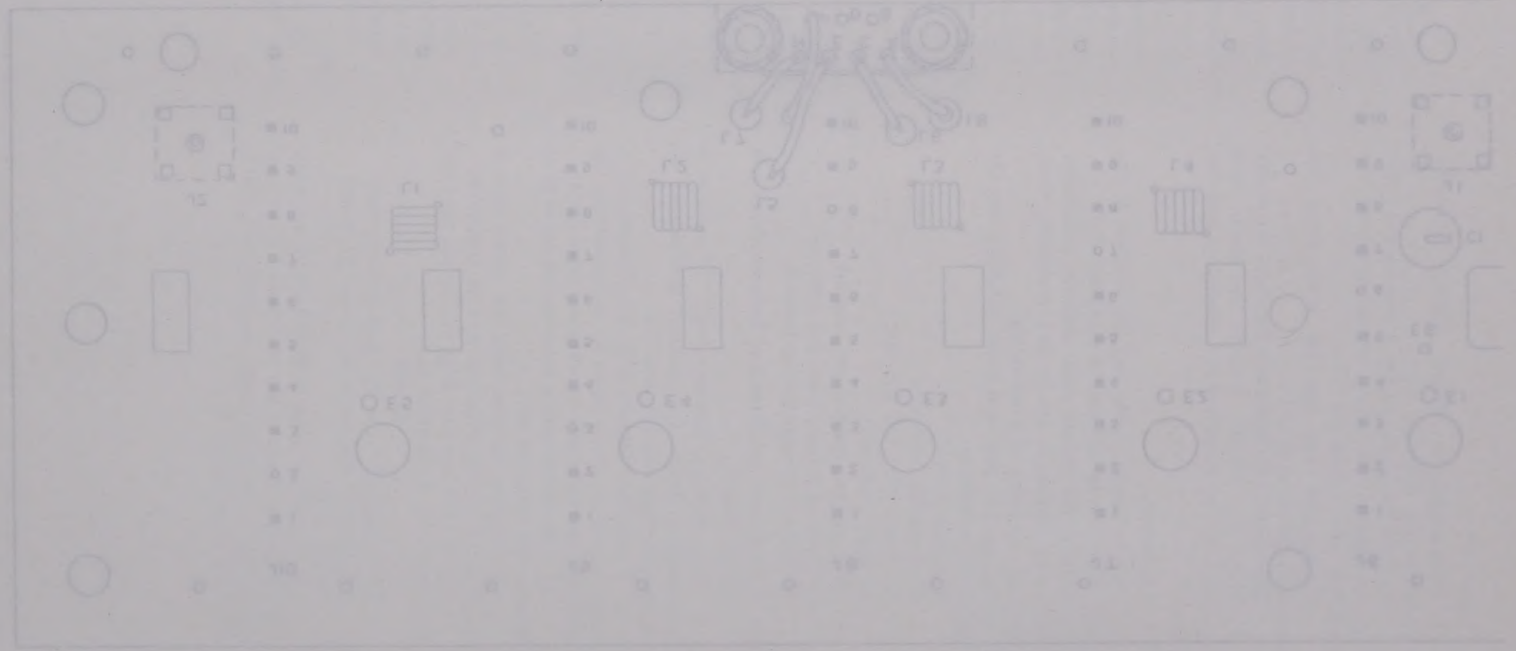

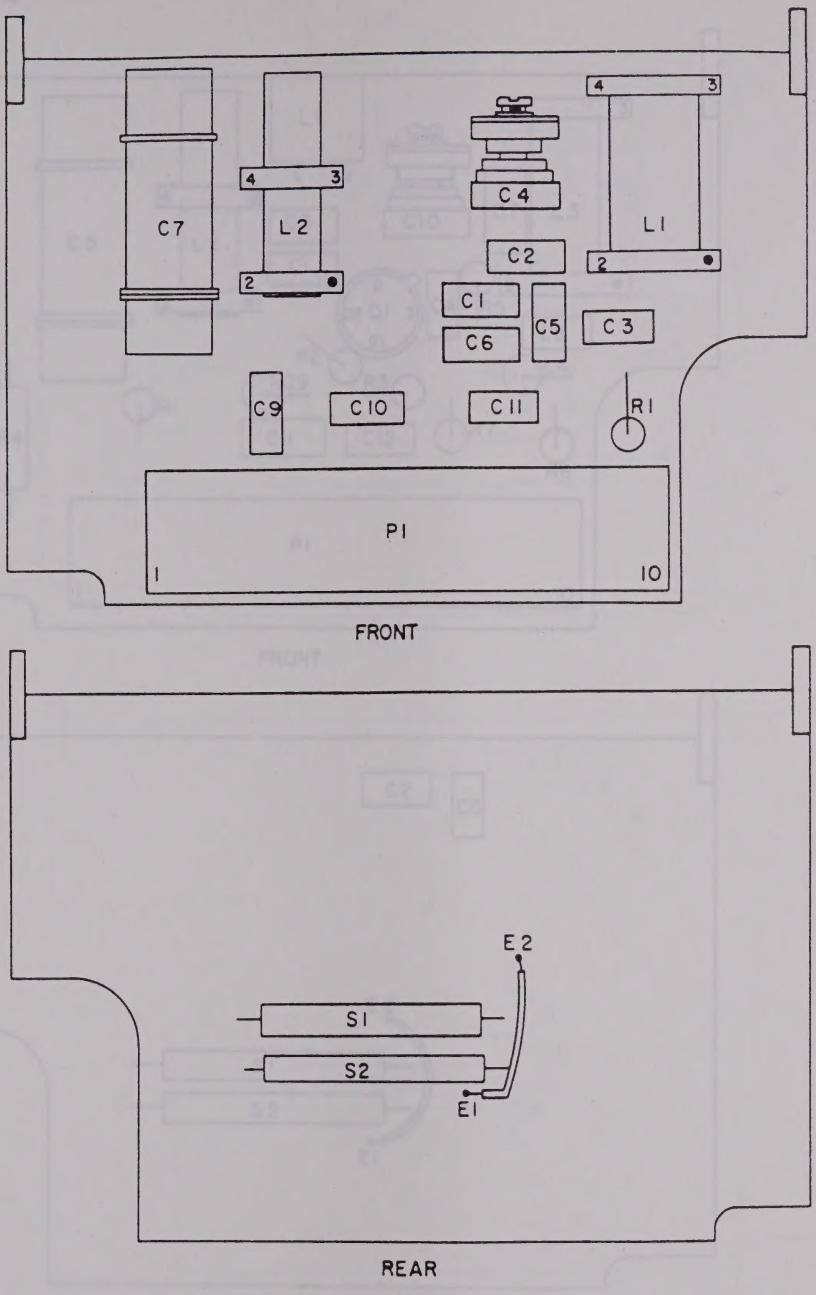

NOTE:
FOR COMPLETE REFERENCE DESIGNATION PREFIX
ALL SYMBOLS WITH 1A1A1A2A1A2.

EL1AL029

Figure 7-2. RF preselector, A1A1A2A1A2, parts location.

L1
C4
C2
C3
C5
C1
C6
L2
C7
R1
C11
C10
C9
P1
10
1
FRONT
E2
S1
S2
E1
REAR

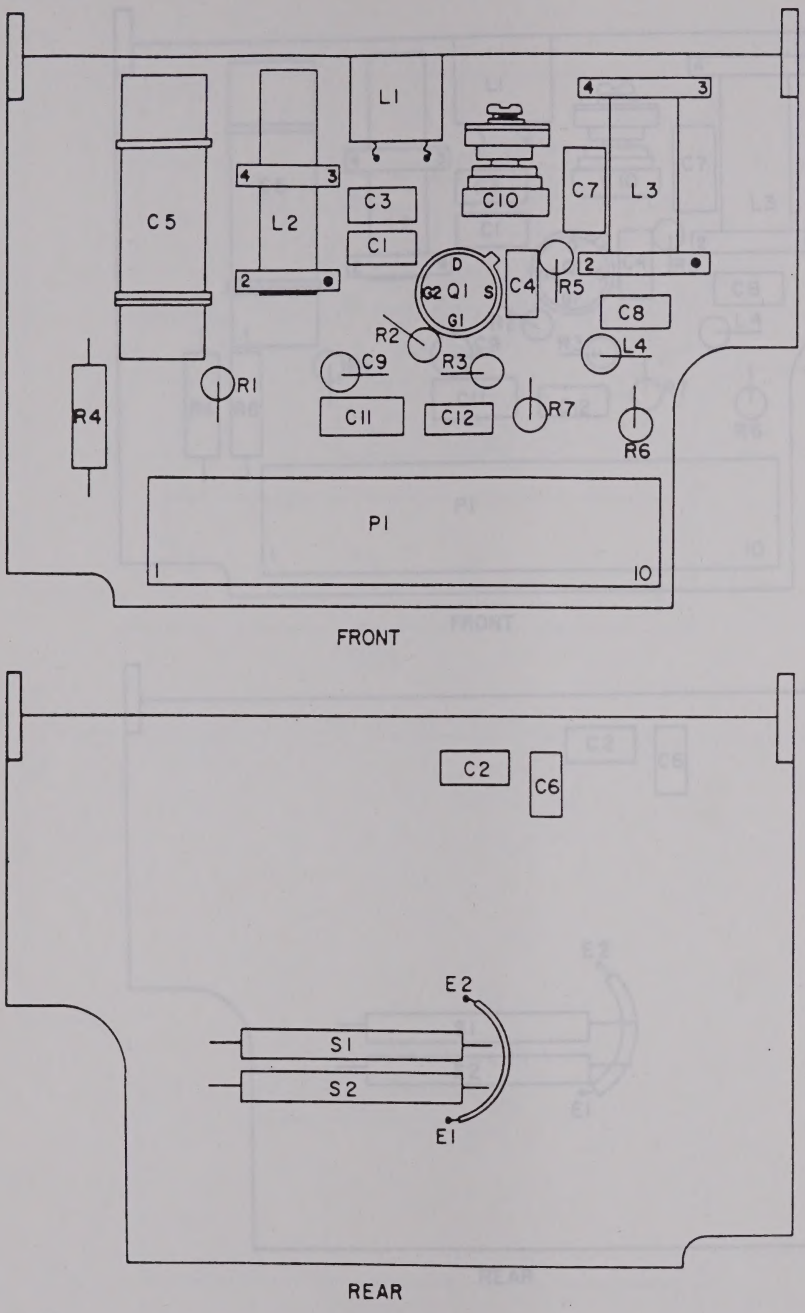

NOTE:
FOR COMPLETE REFERENCE DESIGNATION PREFIX ALL SYMBOLS WITH 1A1A1A2A1A3.

EL1AL030

Figure 7-3. First RF amplifier, A1A1A2A1A3, parts location.

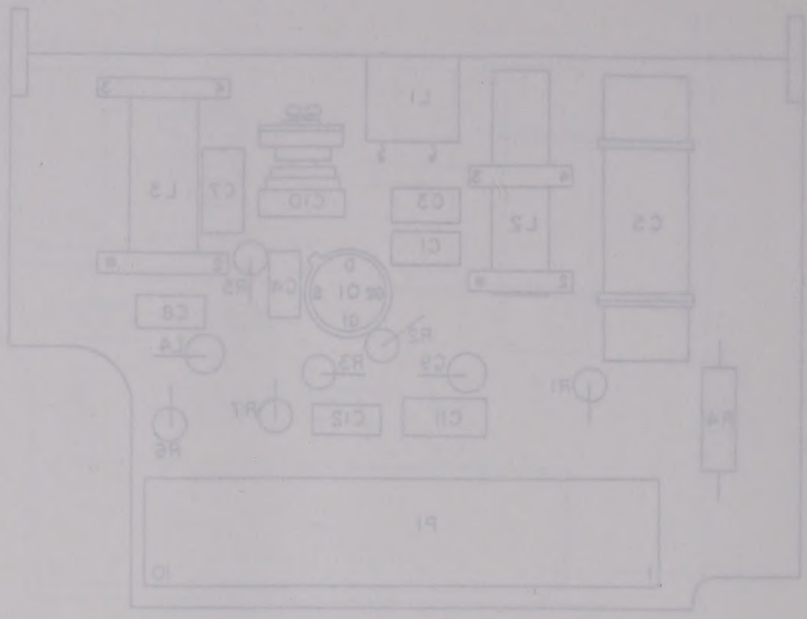
L1
L2
L3
C1
C2
C3
C4
C5
C6
C7
C8
C9
C10
C11
C12
C13
R1
R2
R3
R4
R5
P1
J1
J2
J3
S1
S2
E1
E2
FRONT
REAR

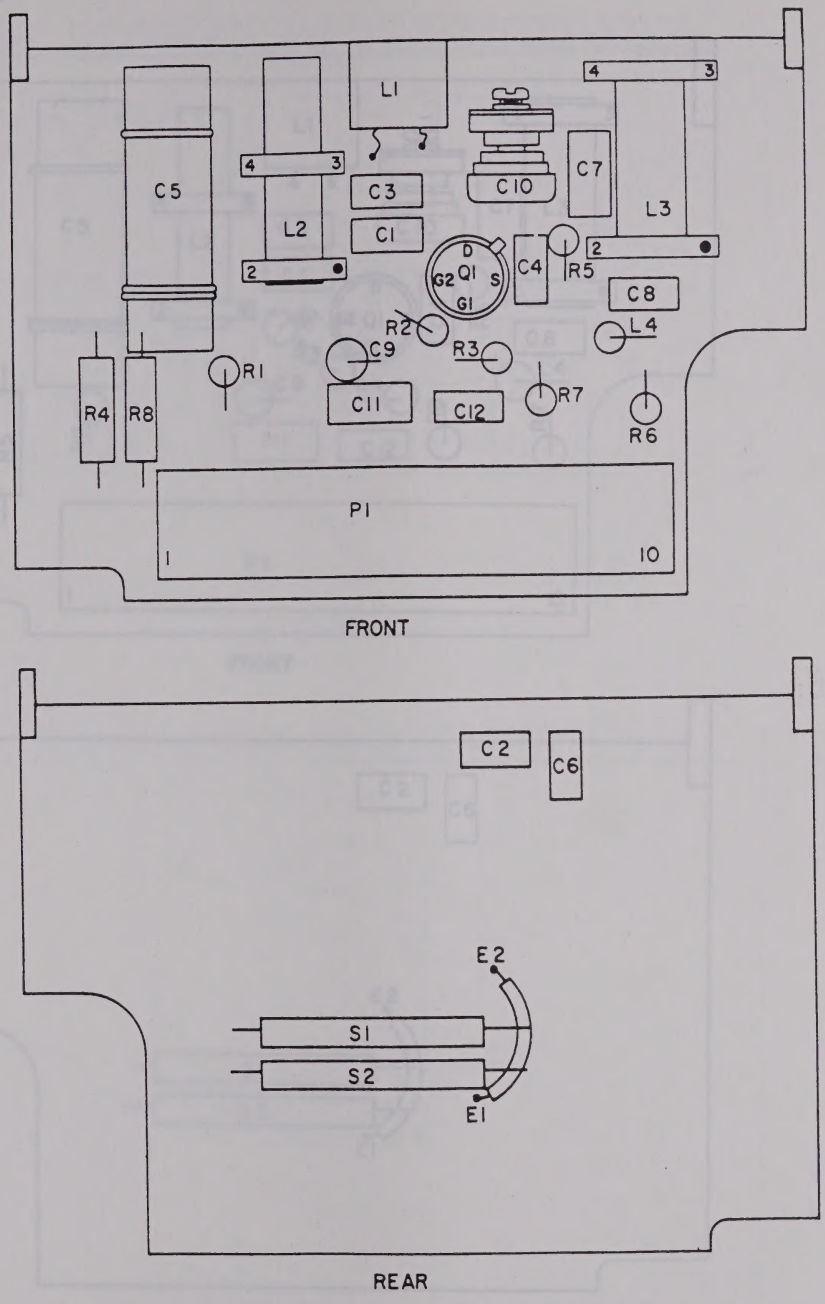

NOTE:

FOR COMPLETE REFERENCE DESIGNATION PREFIX ALL SYMBOLS WITH 1A1A1A2A1A4.

EL1AL031

Figure 7-4. Second RF amplifier, A1A1A2A1A4, parts location.

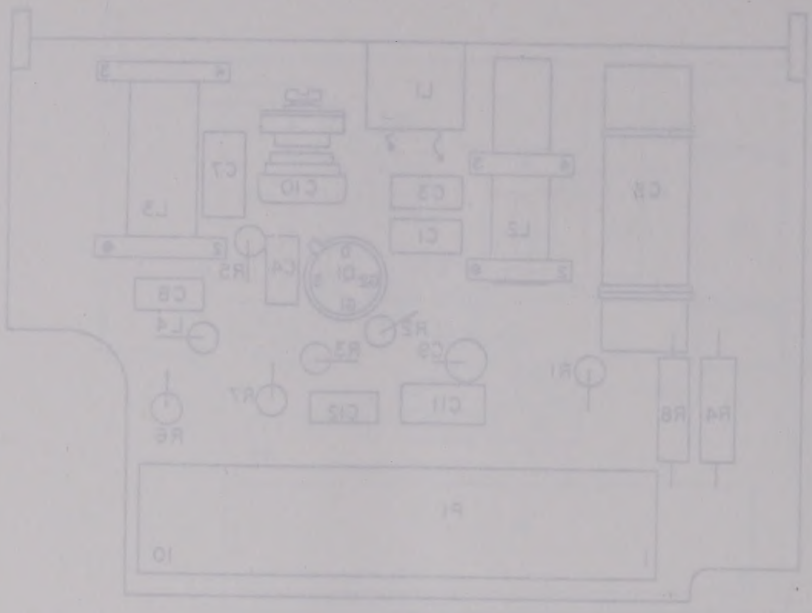

FRONT

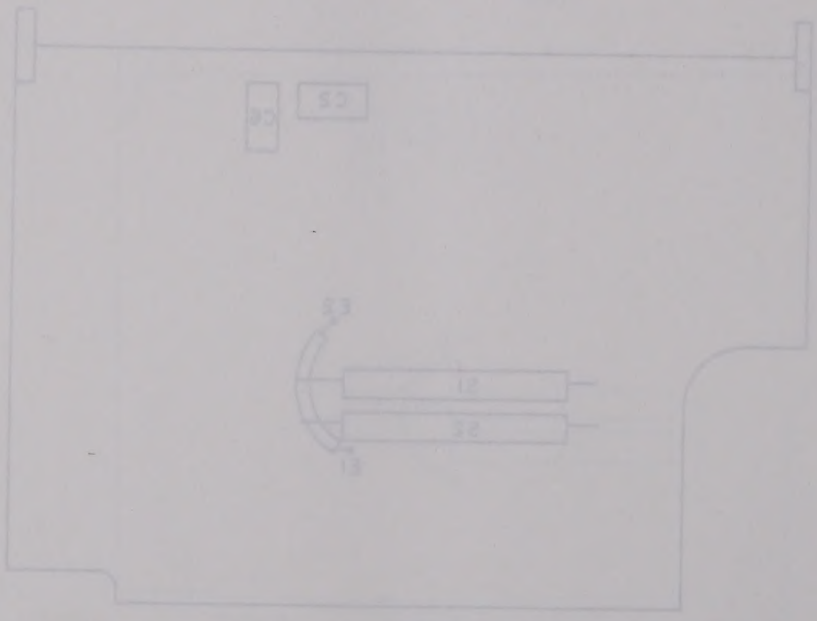

REAR

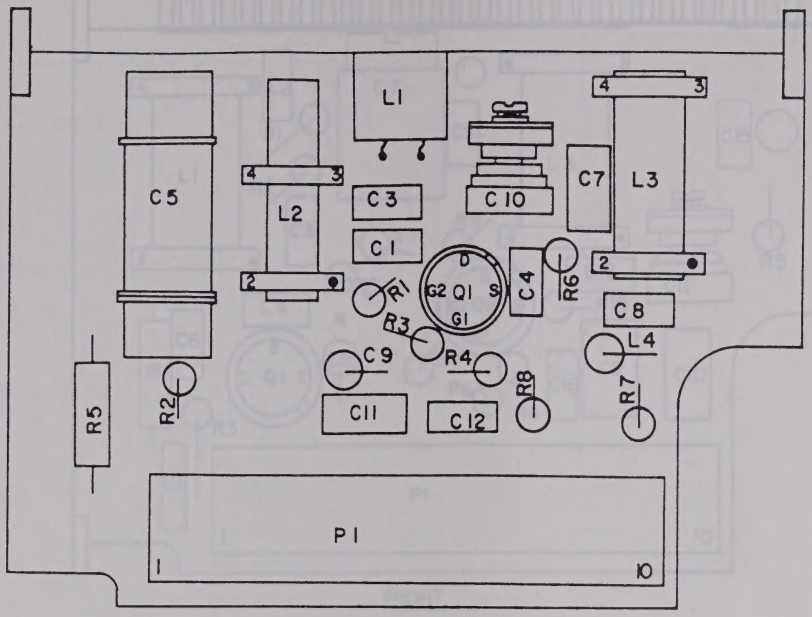

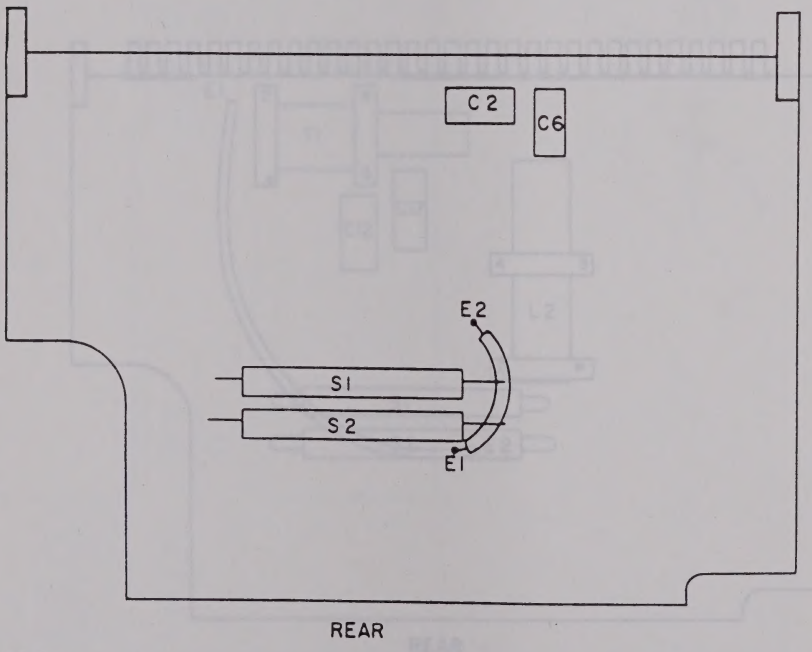

NOTE:
FOR COMPLETE REFERENCE DESIGNATIONS PREFIX ALL SYMBOLS WITH 1A1A1A2A1A5.

EL1AL032

Figure 7-5. Third RF amplifier, A1A1A2A1A5, parts location.

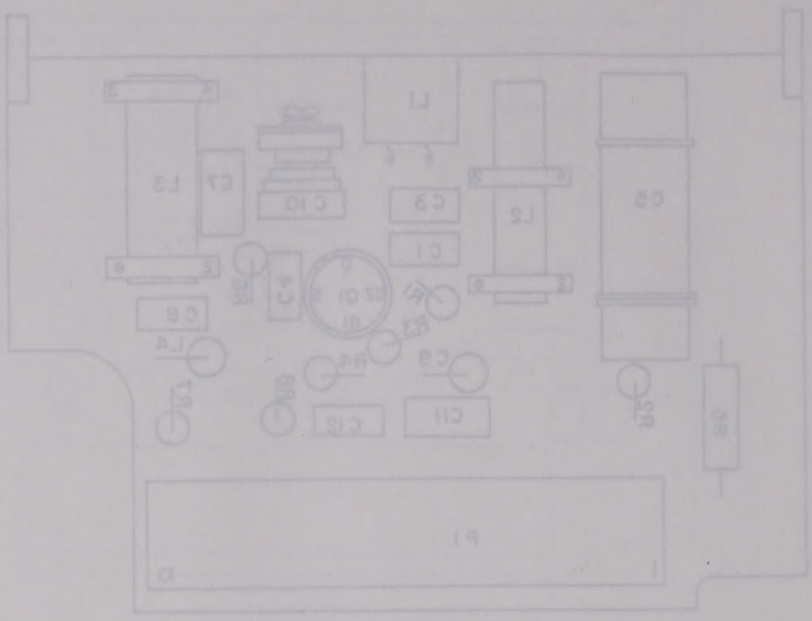

FRONT

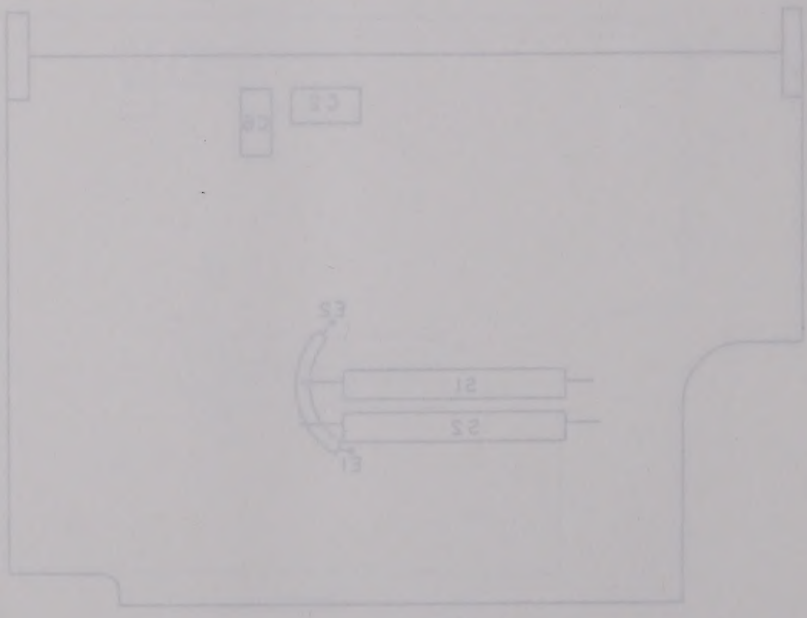

REAR

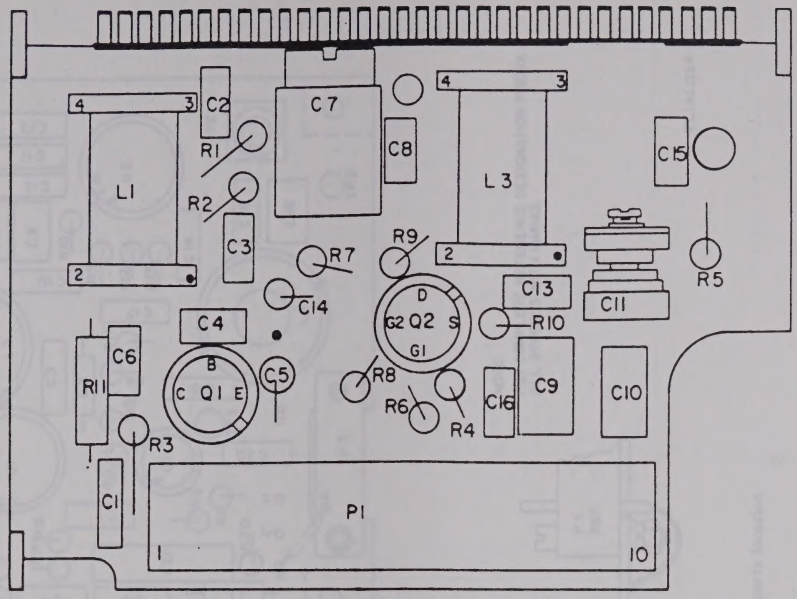

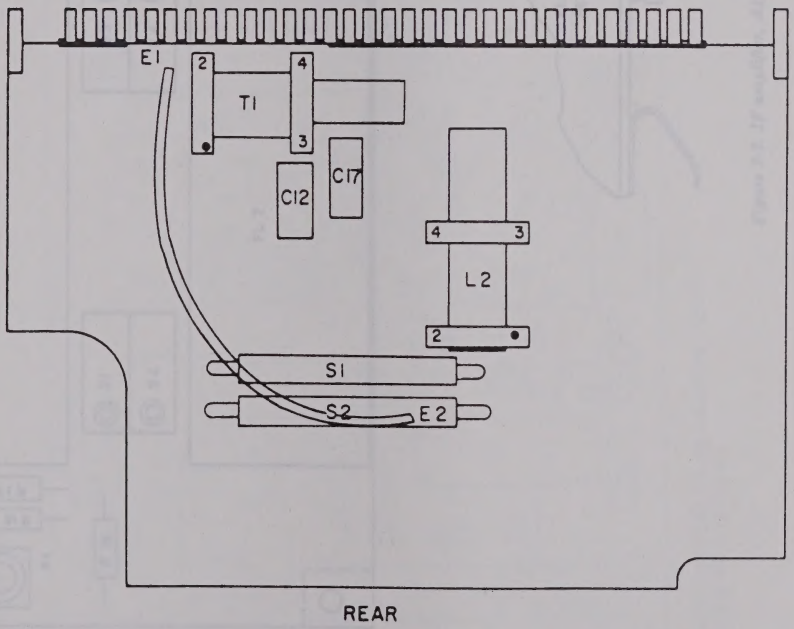

NOTE:
FOR COMPLETE REFERENCE DESIGNATION PREFIX ALL SYMBOLS WITH 1A1A1A2A1A6.

EL1AL033

Figure 7-6. Oscillator-mixer, A1A1A2A1A6, parts location.

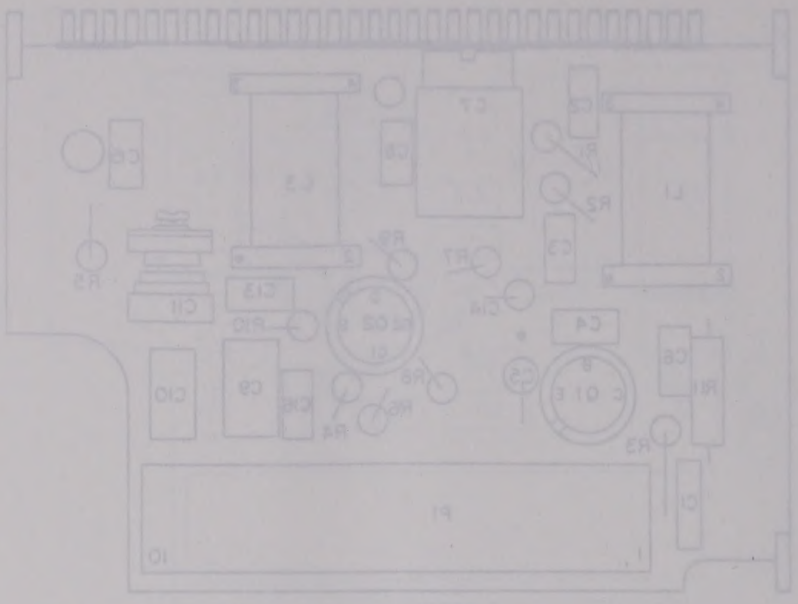
C6
C5
C7
C8
L1
R1
R2
C3
R5
C13
R7
C11
R10
C14
C4
C10
C9
C12
R6
R4
C15
R3
C1
P1
10
1

FRONT

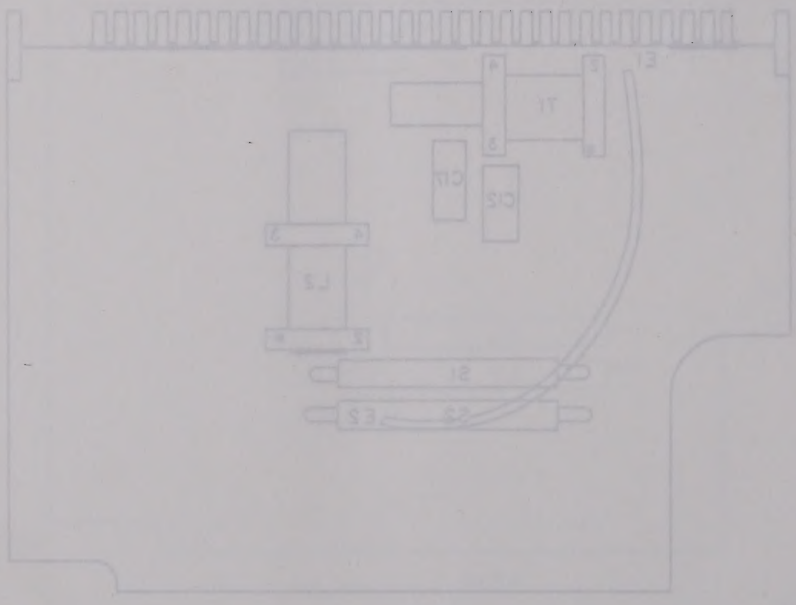
E1
T1
C11
C12
L2
S1
C2
E2

REAR

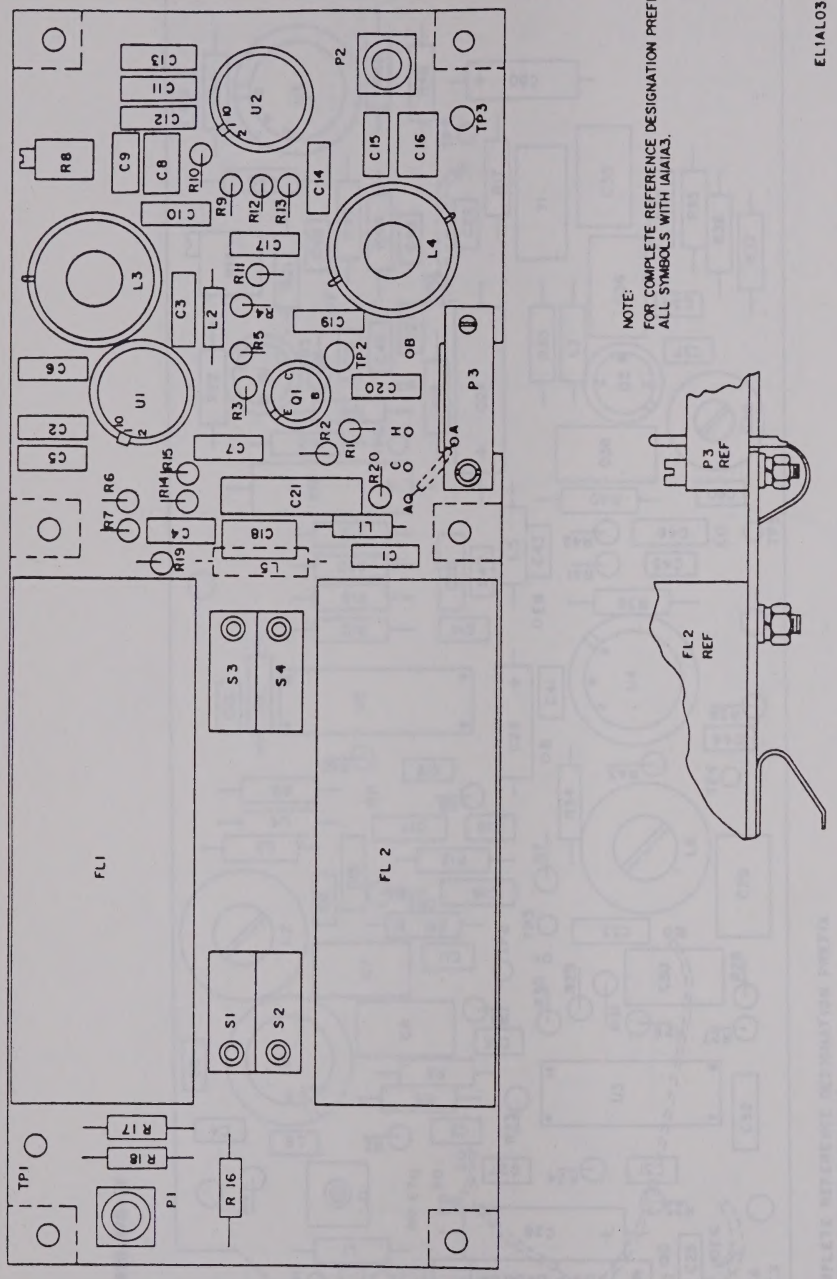

Figure 7-7. IF amplifier, A1A1A2A3A1, parts location.

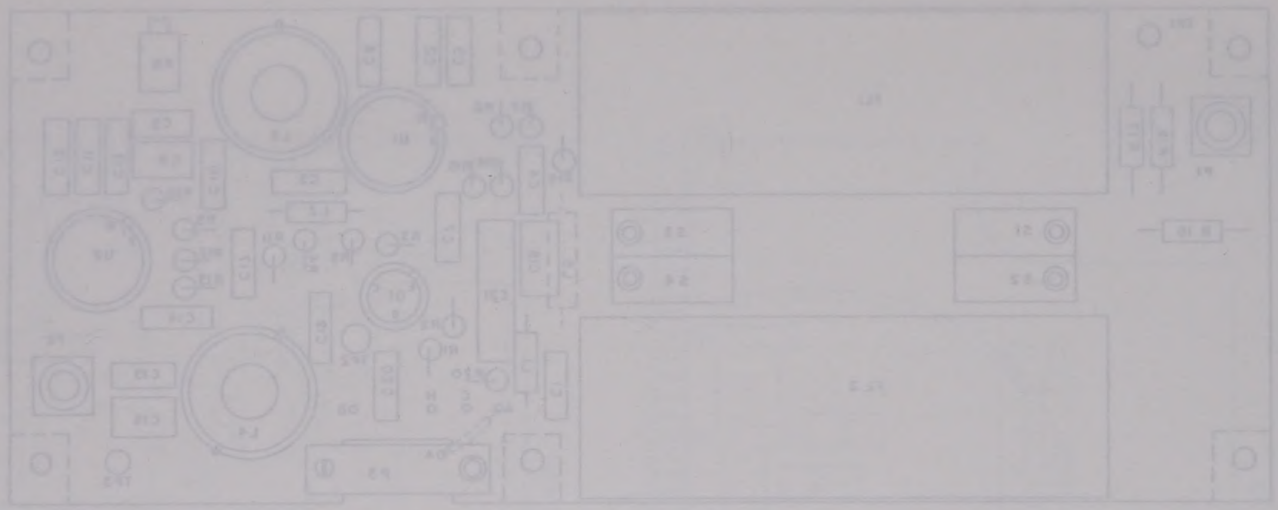

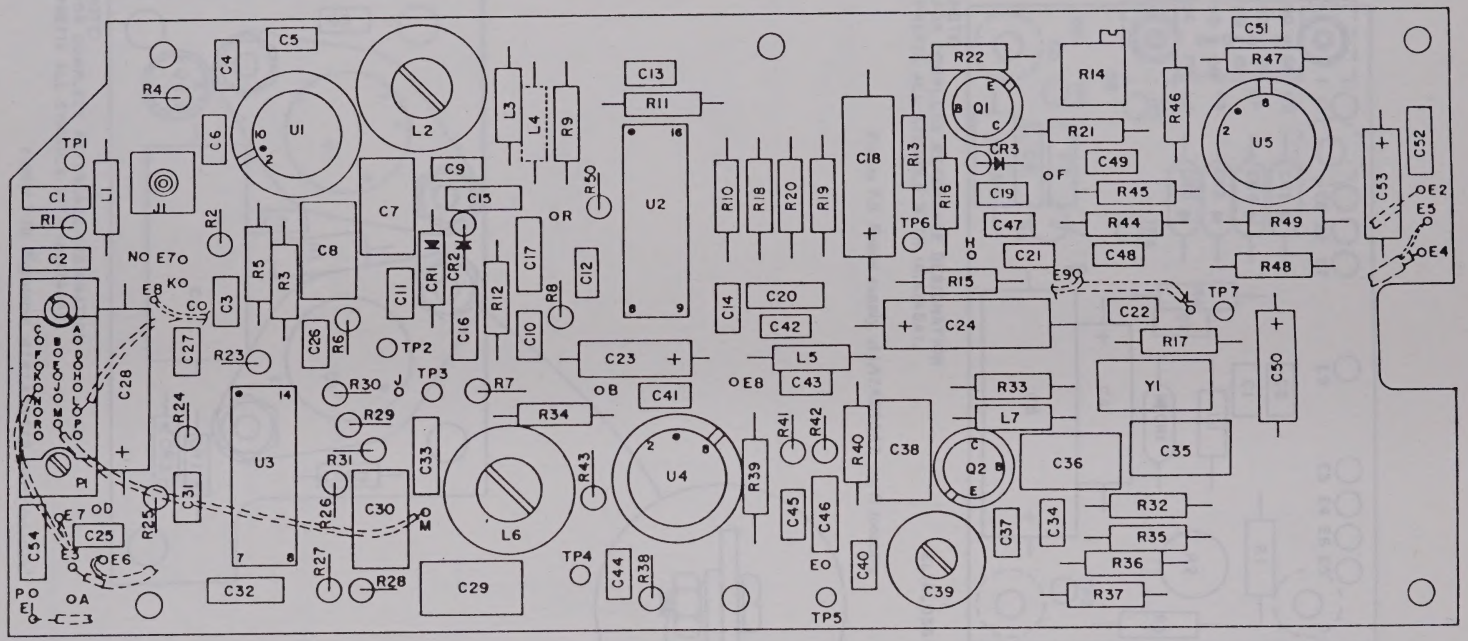

NOTE:
FOR COMPLETE REFERENCE DESIGNATION PREFIX
ALL SYMBOLS WITH 1A1A1A4A1.

EL1AL035

Figure 7-8. Detector, A1A1A2A4A1, parts location.

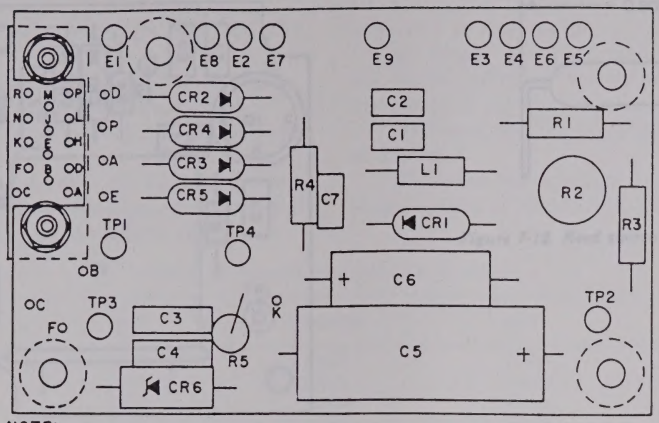

Figure 7-9. Power supply, A1A1A2A5A1, parts location.

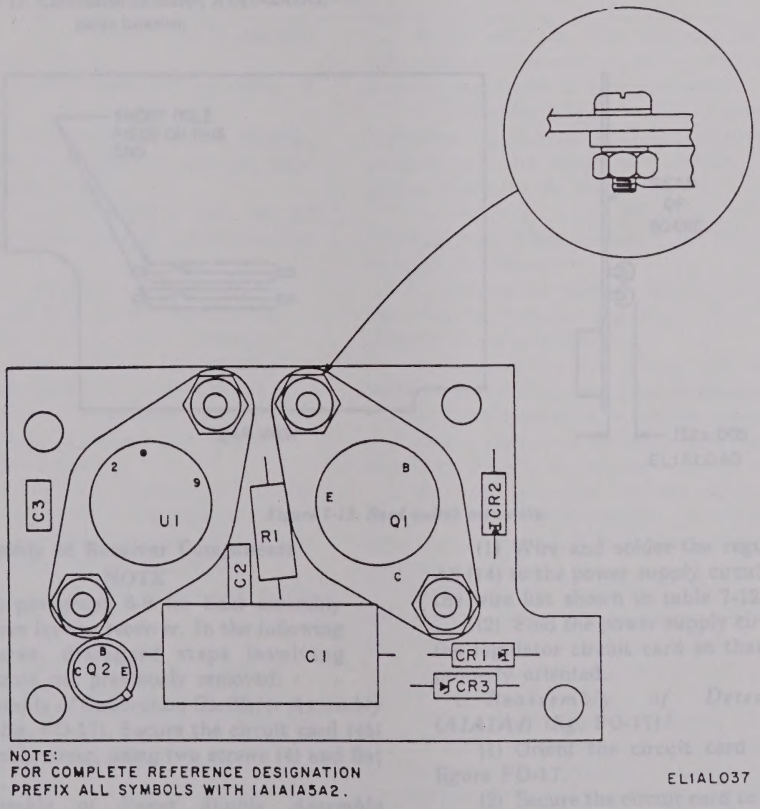

Figure 7-10. Regulator, A1A1A2A5A2, parts location.

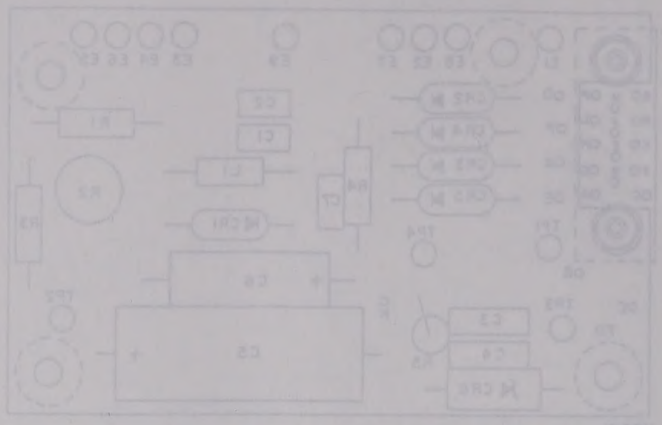

NOTE:
FOR COMPLETE REFERENCE DESIGNATION
PREFIX ALL SYMBOLS WITH 1A1A1A2A1.

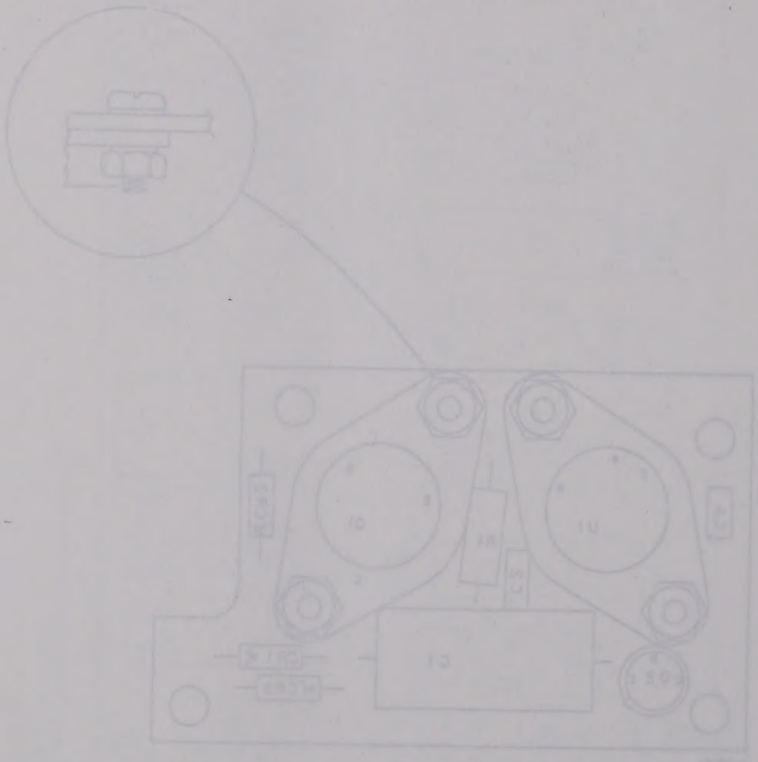

NOTE:
FOR COMPLETE REFERENCE DESIGNATION
PREFIX ALL SYMBOLS WITH 1A1A1A2.

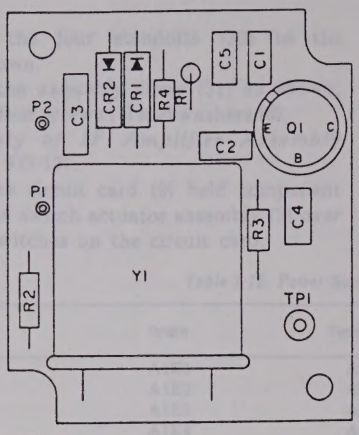

Figure 7-11. Calibration oscillator, A1A1A2A6A1, parts location.

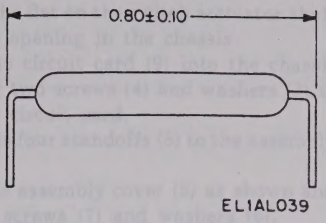

Figure 7-12. Reed switch lead forming dimensions.

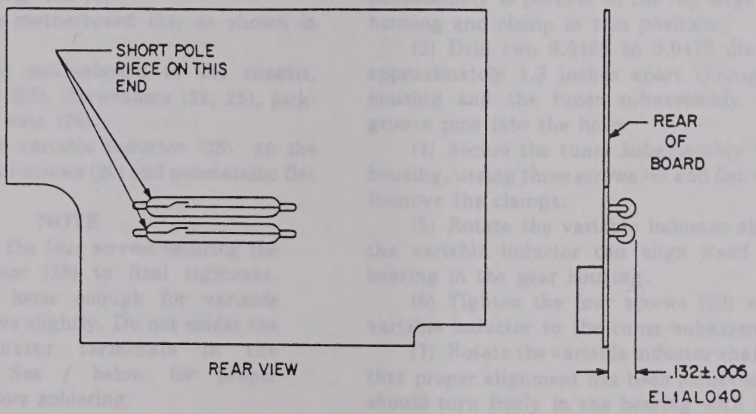

Figure 7-13. Reed switch mounting.

7-9. Reassembly of Receiver Components

NOTE

Refer to paragraph 6-9 for final assembly procedures for the receiver. In the following procedures, disregard steps involving components not previously removed.

a. Reassembly of Calibration Oscillator Assembly (A1A1A6) (fig. FO-17). Secure the circuit card (45) to the assembly cover, using two screws (4) and flat washers (3).

b. Reassembly of Power Supply Assembly (A1A1A5) (fig. FO-17).

(1) Wire and solder the regulator circuit card A2 (14) to the power supply circuit card A1 (13) per the wire list shown in table 7-12.

(2) Fold the power supply circuit card on top of the regulator circuit card so that the connector is properly oriented.

c. Reassembly of Detector Assembly (A1A1A4) (fig. FO-17).

(1) Orient the circuit card (29) as shown in figure FO-17.

(2) Secure the circuit card to the chassis, using

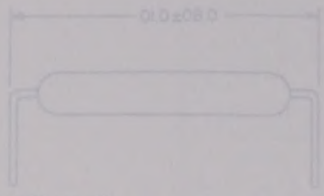

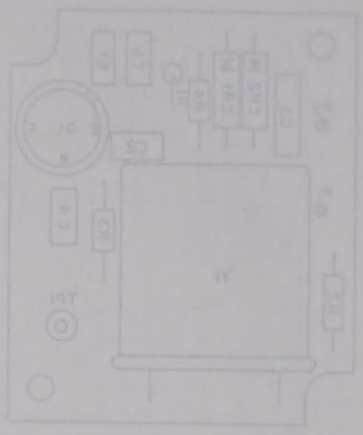

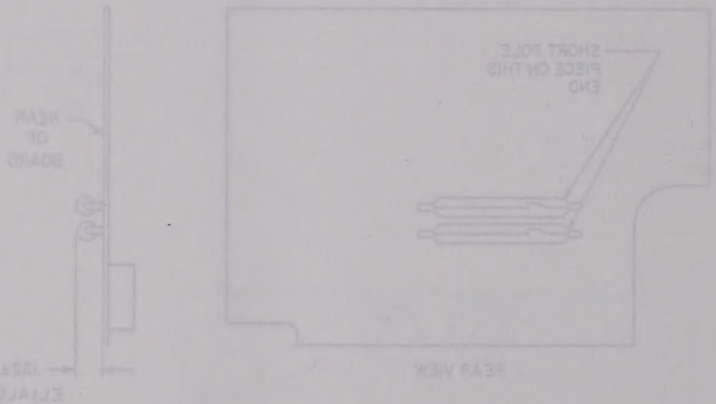
SHORT POLE
PIECE ON THIS
END
REAR
OF
BOARD

two screws (4) and washers (3) in the center of the circuit card.

(3) Secure the four standoffs (30) to the assembly as shown.

(4) Orient the assembly cover (31) as shown, and secure with four screws (7) and washers (6).

d. Reassembly of IF Amplifier Assembly (A1A1A3) (fig. FO-17).

(1) With the circuit card (9) held component side up, place the switch actuator assembly (2) over the four microswitches on the circuit card.

(2) Orient the chassis as shown in figure FO-17 and be sure that the flat on the switch activator shaft is parallel to the opening in the chassis.

(3) Insert the circuit card (9) into the chassis and secure, using two screws (4) and washers (3) in the center of the circuit card.

(4) Secure the four standoffs (8) to the assembly as shown.

(5) Orient the assembly cover (5) as shown and secure with four screws (7) and washers (6).

Table 7-12. Power Supply (A1A1A5) Wire List

Wire No.	Origin	Termination	Color	Size (awg)
1	A1E1	A2E1	White	24
2	A1E2	A2E2	White	24
3	A1E3	A2E3	White	24
4	A1E4	A2E4	White	24
5	A1E5	A2E5	White	24
6	A1E6	A2E6	White	24
7	A1E7	A2E7	White	24
8	A1E8	A2E8	White	24
9	A1E9	A2E9	White	24

e. Reassembly of Tuner Subassembly (A1A1A2A1A1) (fig. FO-19).

(1) Orient the motherboard (24) as shown in figure FO-19.

(2) Secure the motherboard to the chassis, using three screws (23), flatwashers (22, 25), lockwashers (21), and nuts (26).

(3) Secure the variable inductor (28) to the assembly, using four screws (20) and nonmetallic flat washers (21,22).

NOTE

Do nottighten the four screws securing the variable inductor (28) to final tightness. Leave screws loose enough for variable inductor to move slightly. Do not solder the variable inductor terminals to the motherboard. See *f* below for proper orientation before soldering.

(4) Solder the lead from capacitor C1 of the motherboard to terminal J5 on the chassis.

(5) Solder the jumper wire from E6 on the motherboard to terminal J4 on the chassis.

f. Reassembly of Gear and Tuner Assembly (a1A1A2) (fig. FO-19).

NOTE

Steps (2) and (3) below are necessary only if a replacement tuner subassembly is used.

(1) Orient the tuner subassembly so that the variable inductor (28) shaft and the bandswitch shaft are properly aligned with the holes in the gear housing. Place spacer (1) over end of variable inductor shaft before inserting shaft into the gear housing.

(2) Be sure that the top edge of the tuner subassembly is parallel to the top edge of the gear housing and clamp in this position..

(3) Drill two 0.0465 to 0.0478 diameter holes approximately 1.3 inches apart through the gear housing and the tuner subassembly wall. Press groove pins into the holes.

(4) Secure the tuner subassembly to the gear housing, ussing three screws (6) and flat washers (7). Remove the clamps.

(5) Rotate the variable inductor shaft so that the variable inductor can align itself within the bearing in the gear housing.

(6) Tighten the four screws (20) securing the variable inductor to the tuner subassembly.

(7) Rotate the variable inductor shaft to be sure that proper alignment has been achieved. The shaft should turn freely in the bearing with no binding.

(8) Carefully solder the ten variable inductor terminals to the motherboard. Use short pieces of buss wire as necessary to make direct connections with no stressing.

(9) Rotate the bandswitch shaft in the tuner subassembly so that the magnets are in the vertical position, parallel to the tuner subassembly wall.

(10) Orient the bandswitch coupling (3) as shown in figure FO-19.

(11) Apply sealing compound, grade C per MIL-S-22473, to the setscrew (2) and capscrew (10) of the bandswitch coupling. Engage coupling on bandswitch shaft so there is 0.001 to 0.004 inches of end play in the shaft. Tighten setscrew and capscrew.

two screws (4) and washers (3) in the center of the circuit card.

(3) Secure the four standoffs (30) to the assembly as shown.

(4) Orient the assembly cover (31) as shown, and secure with four screws (7) and washers (6).

d. Reassembly of IF Amplifier Assembly (A1A1A3) (fig. FO-17).

(1) With the circuit card (9) held component side up, place the switch actuator assembly (2) over the four microswitches on the circuit card.

(2) Orient the chassis as shown in figure FO-17 and be sure that the flat on the switch activator shaft is parallel to the opening in the chassis.

(3) Insert the circuit card (9) into the chassis and secure, using two screws (4) and washers (3) in the center of the circuit card.

(4) Secure the four standoffs (8) to the assembly as shown.

(5) Orient the assembly cover (5) as shown and secure with four screws (7) and washers (6).

Table 7-12. Power Supply (A1A1A3) Wire List

Wire No.	Origin	Termination	Color	Size (awg)
1	A1E1	A2E1	White	24
2	A1E2	A2E2	White	24
3	A1E3	A2E3	White	24
4	A1E4	A2E4	White	24
5	A1E5	A2E5	White	24
6	A1E6	A2E6	White	24
7	A1E7	A2E7	White	24
8	A1E8	A2E8	White	24
9	A1E9	A2E9	White	24

e. Reassembly of Tuner Subassembly (A1A1A2A1A1) (fig. FO-19).

(1) Orient the motherboard (24) as shown in figure FO-19.

(2) Secure the motherboard to the chassis, using three screws (23), flatwashers (22, 25), lockwashers (21), and nuts (26).

(3) Secure the variable inductor (28) to the assembly, using four screws (20) and nonmetallic flat washers (21,22).

NOTE

Do not tighten the four screws securing the variable inductor (28) to final tightness. Leave screws loose enough for variable inductor to move slightly. Do not solder the variable inductor terminals to the motherboard. See *f* below for proper orientation before soldering.

(4) Solder the lead from capacitor C1 of the motherboard to terminal J5 on the chassis.

(5) Solder the jumper wire from E6 on the motherboard to terminal J4 on the chassis.

f. Reassembly of Gear and Tuner Assembly (a1A1A2) (fig. FO-19).

NOTE

Steps (2) and (3) below are necessary only if a replacement tuner subassembly is used.

(1) Orient the tuner subassembly so that the variable inductor (28) shaft and the bandswitch shaft are properly aligned with the holes in the gear housing. Place spacer (1) over end of variable inductor shaft before inserting shaft into the gear housing.

(2) Be sure that the top edge of the tuner subassembly is parallel to the top edge of the gear housing and clamp in this position.

(3) Drill two 0.0466 to 0.0478 diameter holes approximately 1.3 inches apart through the gear housing and the tuner subassembly wall. Press groove pins into the holes.

(4) Secure the tuner subassembly to the gear housing, using three screws (6) and flat washers (7). Remove the clamps.

(5) Rotate the variable inductor shaft so that the variable inductor can align itself within the bearing in the gear housing.

(6) Tighten the four screws (20) securing the variable inductor to the tuner subassembly.

(7) Rotate the variable inductor shaft to be sure that proper alignment has been achieved. The shaft should turn freely in the bearing with no binding.

(8) Carefully solder the ten variable inductor terminals to the motherboard. Use short pieces of buss wire as necessary to make direct connections with no stressing.

(9) Rotate the bandswitch shaft in the tuner subassembly so that the magnets are in the vertical position, parallel to the tuner subassembly wall.

(10) Orient the bandswitch coupling (3) as shown in figure FO-19.

(11) Apply sealing compound, grade C per MIL-S-22473, to the setscrew (2) and capscrew (10) of the bandswitch coupling. Engage coupling on bandswitch shaft so there is 0.001 to 0.004 inches of end play in the shaft. Tighten setscrew and capscrew.

(12) Place the gear clamp (4) and the anti-backlash gear (5) on the variable inductor shaft. Preload the anti-backlash gear before engaging the idler gear.

(13) Tighten the screw in the gear clamp.

(14) Place the dial tape spools on the spool pins as shown in figure FO-19.

(15) Place the c rings on the spool pins.

(16) Align the dial tape as described in paragraph 7-13*a*.

g. Reassembly of RF Tuner Assembly (A1A1A2A1) (fig. FO-19).

(1) Orient of RF tuner circuit cards (13, 14, 15, 16, 17) as shown in figure FO-19.

(2) Insert the circuit cards in the RF tuner, being careful not to bend any pins.

(3) Orient the RF tuner cover (19) as shown and secure the cover using six screws (18).

h. Reassembly of Control Panel Assembly (A1A1A1) (fig. FO-17 and FO-18).

(1) Attach the wavy washer and stationary gear of the TUNE knob to the TUNE hole in the panel using the screw and watertight nut (36) as shown in figure FO-17.

(2) Replace the front panel controls, connectors, indicators, etc, using the attaching hardware as shown in figure FO-18.

(3) Replace the knobs on the front panel controls. Be sure that pointer type knobs are in the proper position before securing them to the shaft.

(4) Solder the wiring on any controls, connectors, etc. which have been removed, and remove the wire tags.

NOTE

Refer to table 7-13 for wiring details.

Table 7-13. Receiver Wire List

Wire No.	Color	Length (in).	From	To
1	Wht/grn	9	P1-A	A1S5B-11F
2	Red	14	P1-C	A2E3-6
3	Yellow	8	P1-E	A1S2B-C
4	Black	14	P1-F	A2E2-3
5	Wht/red	14	P1-H	A2E4-4
6	Yellow shielded	13	J2-A	A1J3
7	Violet shielded	13	J2-B	A1R1-2
8	Black	15	J2-A shield	A2E1-3
9	Wht/yel	12	J2-D	A1S5B-6F
10	Blue shielded	12	J2-E	A1S5B-4F
11	White	12	J2-F	A1S3-NC
12	Wht/brn	11	J2-H	A1S2A-B
13	Red shielded	12	J2-J	A1S5B-2F
14	Wht/gray	12	J2-K	A1S5B-10F
15	Green shielded	12	J2-L	A1S5B-3F
16	Gray shielded	14	J2-M	A1-J1
17	Wht/red	17	J2-N	A2E4-6
18	Red	17	J2-P	A2E3-5
19	Orange shielded	14	J2-R	A1J2
20	Wht/red	17	J1-A	A2E4-5
21	Black	17	J1-B	A2E2-5
22	Orange	11	J1-C	A1R2-3
23	Yellow	11	J1-H	A1S2B-C
24	Brown	5	J3-A	T1-6
25	Yellow	6	J3-B	A1S3-NO
26	Red	4	J3-C	A2E3-1
27	Black	4	J3-D	A2E1-2
28	Wht/red	4	J3-E	A2E4-3
29	Wht/brn	8	J3-F	P2-11
30	Wht/orn	8	J3-K	A1S5B-8R
31	Orange	5	J3-P	T1-5
32	Wht/brn	7	T1-1	A1S5A-7F
33	Green	7	T1-2	A1S5A-1F
34	Blue	7	T1-3	A1S5A-11R
35	Violet	7	T1-4	A1S5A-5R
36	Yellow shielded	9	P2-1	A1J3
37	Wht/blk	3	P2-L shield	P2-2
38	Violet Shielded	5	P2-3	A1F1-1
39	Brown	3	P2-4	A1S5B-3R
40	Gray	3	P2-5	A1S5A-2F
41	White	3	P2-6	A1S5A-6R

(12) Place the gear clamp (4) and the anti-backlash gear (3) on the variable inductor shaft. Preload the anti-backlash gear before engaging the idler gear.

(13) Tighten the screw in the gear clamp.

(14) Place the dial tape spools on the spool pins as shown in figure FO-19.

(15) Place the c rings on the spool pins.

(16) Align the dial tape as described in paragraph 7-12a.

g. Reassembly of RF Tuner Assembly (A1A1A2A2A1) (fig. FO-19).

(1) Orient of RF tuner circuit cards (13, 14, 15, 16, 17) as shown in figure FO-19.

(2) Insert the circuit cards in the RF tuner, being careful not to bend any pins.

(3) Orient the RF tuner cover (18) as shown and secure the cover using six screws (18).

h. Reassembly of Control Panel Assembly (A1A1A1) (fig. FO-17 and FO-18).

(1) Attach the wavy washer and stationary gear of the TUNE knob to the TUNE hole in the panel using the screw and watertight nut (36) as shown in figure FO-17.

(2) Replace the front panel controls, connectors, indicators, etc, using the attaching hardware as shown in figure FO-18.

(3) Replace the knobs on the front panel controls. Be sure that pointer type knobs are in the proper position before securing them to the shaft.

(4) Solder the wiring on any controls, connectors, etc. which have been removed, and remove the wire tags.

NOTE

Refer to table 7-13 for wiring details.

Table 7-13. Receiver Wire List

Wire No	Color	Length (in.)	From	To
1	Wht/grn	6	P1-A	A1SSB-11F
2	Red	14	P1-C	A2EX-6
3	Yellow	6	P1-E	A1SSB-C
4	Black	14	P1-F	A2EX-3
5	Wht/red	14	P1-H	A2EX-4
6	Yellow shielded	12	J2-A	A1J3
7	Violet shielded	12	J2-B	A1P1-5
8	Black	14	J2-A shield	A2EX-3
9	Wht/yel	12	J2-D	A1SSB-6F
10	Blue shielded	12	J2-E	A1SSB-4F
11	Wht/blu	12	J2-F	A1SSB-NC
12	Wht/brn	11	J2-H	A1SSA-B
13	Red shielded	12	J2-J	A1SSB-2F
14	Wht/grey	12	J2-K	A1SSB-10F
15	Green shielded	12	J2-L	A1SSB-5F
16	Grey shielded	14	J2-M	A1J1
17	Wht/red	17	J2-N	A2EX-6
18	Red	17	J2-P	A2EX-5
19	Orange shielded	14	J2-R	A1J2
20	Wht/red	17	J1-A	A2EX-4
21	Black	17	J1-B	A2EX-5
22	Orange	13	J1-C	A1P2-3
23	Yellow	11	J1-H	A1SSB-C
24	Brown	5	J3-A	T1-4
25	Yellow	5	J3-B	A1SSA-NC
26	Red	4	J3-C	A1EX-1
27	Black	4	J3-D	A2EX-3
28	Wht/red	4	J3-E	A2EX-4
29	Wht/brn	3	J3-F	T1-3
30	Wht/brn	4	J3-K	A1SSB-8R
31	Orange	3	J3-P	T1-1
32	Wht/brn	7	T1-1	A1SSA-7F
33	Green	7	T1-2	A1SSA-1F
34	Blue	7	T1-3	A1SSA-11R
35	Violet	7	T1-4	A1SSA-9R
36	Yellow shielded	8	P2-1	A1J3
37	Wht/blk	3	P2-1 shield	P2-4
38	Violet Shielded	3	P2-3	A1P1-1
39	Brown	3	P2-4	A1SSB-8R
40	Gray	3	P2-5	A1SSA-2F
41	Aqua	3	P2-6	A1SSA-6R

Table 7-13. Receiver Wire List—Continued

Wire No.	Color	Length (in.)	From	To
42	Orange	3	P2-7	A1S5A-12R
43	Orange shielded	3	P2-8	A1J2
44	Gray shielded	3	P2-9	A1S2B-C
45	Green	9	P2-10	A1S4-NO
46	Black	7	P2-12	A2E2-4
47	Wht/vio	4	P2-13	A1S5B-9R
48	Yellow	4	P2-14	A1S5A-8F
49	Blue shielded	5	P2-15	A1F1-2
50	Black	5	A2E1-1	A1M1(—)
51	Black	·	A2E1-1	A1R2-1
52	Black	·	A2E1-5	A2E2-1
53	Black	·	A2E1-4	A1R1-1
54	Black	·	A2E2-2	A1DS1-2
55	Buss	·	A2E2-6	A2E6
56	Red	·	A2E3-2	A1S5B-2R
57	Red	·	A2E3-3	A1S4-M
58	Wht/red	·	A2E4-2	A1S5B-9F
59	Red shielded	·	A1S5B-1F	A1R1-3
60	Buss	·	A1S5B-7F	A1S5B-9F
61	Orange	·	A1S4-C	A1DS1-1
62	Blue	·	A1M1(+)	A1S3-C
63	Black	·	A1R1-2 shield	A1J3-GND
64	Buss	·	A1R2-2	A1S2B-D
65	Buss	·	A1S2A-A	A1S2B-C
66	A1A1W1	·	A1A1A1C1J2	A2A1A1J1
67	A1A1W2	·	A2A1A1J2	A3P1
68		·	A4J1	A3P2
69	Wht/blk	3	J2-A shield	J2-B shield
70	Wht/blk	3	J2-B shield	J2-E shield
71	Wht/blk	3	J2-E shield	J2-J shield
72	Wht/blk	3	J2-J shield	J2-L shield
73	Wht/blk	3	J2-L shield	J2-M shield
74	Wht/blk	3	J2-M shield	J2-R shield
75	Black	3	J2-A shield	J2-C
76	Wht/blk	3	A1S5B-F1 shield	A1S5B-F2 shield
77	Wht/blk	3	A1S5B-F2 shield	A1S5B-F3 shield
78	Wht/blk	3	A1S5B-F3 shield	A1S5B-F4 shield
79	Wht/blk	3	A1J1 shield	A1E1
80	Black	3	A1S2B-C shield	A1R2-1
81	Wht/blk	3	A1J2 shield	A1J2 shield
82	Black	3	A1J2 shield	A1E2
83	Wht/blk	3	P2-1 shield	P2-8 shield
84	Wht/blk	3	P2-8 shield	P2-9 shield
85	Wht/blk	3	A1R1-3 shield	A1R1-2 shield
86	Wht/blk	3	A1J3 shield	A1J3 shield
87	Black	3	A1J3 shield	A1J3 GND
88	Wht/blk	2	A1F1-1shield	A1F1-2 shield
89	Wht/blk	2	A1F1-2 shield	A1A1A1-E3

i. Reassembly of Radio Assembly (A1A1) (fig. FO-17).

NOTE

During the following procedure, be careful not to pinch wires between assemblies. Carefully observe the polarity of the connectors and the orientation of the various parts shown in figure FO-17.

(1) Secure the main rib assembly to the gear housing, using four screws and lockwashers.

(2) Secure the rear support bracket (41) to the RF tuner assembly, using flatwashers (42), lockwashers (34) and nuts (43).

(3) Secure connectors J1 (18), J2 (26), and J3 (17) to the main rib assembly. Observe connector polarity.

(4) Reconnect cable W2 (22) and connector P1 (18) to J3 on the RF tuner motherboard.

(5) Reconnect and solder all wiring connecting the control panel with the remainder of the receiver. See table 7-13 for wiring details. Reconnect connector W1P1 (48) at antenna trimmer connector J2.

Table 7-13. Receiver Wire List—Continued

Wire No.	Color	Length (in.)	From	To
42	Orange	3	P2-7	A1S5A-12R
43	Orange shielded	3	P2-8	A1J2
44	Gray shielded	3	P2-9	A1S2B-C
45	Green	9	P2-10	A1S4-NO
46	Black	7	P2-12	A2E2-4
47	Wht/vio	4	P2-13	A1S5B-9R
48	Yellow	4	P2-14	A1S5A-8F
49	Blue shielded	5	P2-15	A1F1-2
50	Black	6	A2E1-1	A1M11-1
51	Black	-	A2E1-4	A1R2-1
52	Black	-	A2E1-6	A2E2-1
53	Black	-	A2E1-8	A1R1-1
54	Black	-	A2E2-2	A1DS1-2
55	Buss	-	A2E2-6	A2E6
56	Red	-	A2E3-2	A1S5B-2R
57	Red	-	A2E3-3	A1S4-M
58	Wht/red	-	A2E4-2	A1S5B-9F
59	Red shielded	-	A1S5B-1F	A1R1-3
60	Buss	-	A1S5B-7F	A1S5B-9F
61	Orange	-	A1S4-C	A1DS1-1
62	Blue	-	A1M11-1	A1S5-C
63	Black	-	A1R1-2 shield	A1J3-GND
64	Buss	-	A1R2-2	A1S2B-D
65	Buss	-	A1S2A-A	A1S2B-C
66	A1A1W1	-	A1A1A1C1J2	A2A1A1J1
67	A1A1W2	-	A2A1A1J2	A3P1
68		-	A4J1	A3P2
69	Wht/blk	3	J2-A shield	J2-B shield
70	Wht/blk	3	J2-B shield	J2-E shield
71	Wht/blk	3	J2-E shield	J2-J shield
72	Wht/blk	3	J2-J shield	J2-L shield
73	Wht/blk	3	J2-L shield	J2-M shield
74	Wht/blk	3	J2-M shield	J2-R shield
75	Black	3	J2-A shield	J2-C
76	Wht/blk	3	A1S5B-F1 shield	A1S5B-F2 shield
77	Wht/blk	3	A1S5B-F2 shield	A1S5B-F3 shield
78	Wht/blk	3	A1S5B-F3 shield	A1S5B-F4 shield
79	Wht/blk	3	A1J1 shield	A1E1
80	Black	3	A1S2B-C shield	A1R2-1
81	Wht/blk	3	A1J2 shield	A1J2 shield
82	Black	3	A1J2 shield	A1E2
83	Wht/blk	3	P2-1 shield	P2-6 shield
84	Wht/blk	3	P2-6 shield	P2-9 shield
85	Wht/blk	3	A1R1-2 shield	A1R1-2 shield
86	Wht/blk	3	A1J3 shield	A1J3 shield
87	Black	3	A1J3 shield	A1J3-GND
88	Wht/blk	2	A1F1-1shield	A1F1-2 shield
89	Wht/blk	2	A1F1-2 shield	A1A1A1-E5

1. Reassembly of Radio Assembly (A1A1) (fig. FO-17).

NOTE

During the following procedure, be careful not to pinch wires between assemblies. Carefully observe the polarity of the connectors and the orientation of the various parts shown in figure FO-17.

(1) Secure the main rib assembly to the gear housing, using four screws and lockwashers.

(2) Secure the rear support bracket (41) to the RF tuner assembly, using flatwashers (42), lockwashers (34) and nuts (43).

(3) Secure connectors J1 (18), J2 (26), and J3 (17) to the main rib assembly. Observe connector polarity.

(4) Reconnect cable W2 (22) and connector P1 (18) to J3 on the RF tuner motherboard.

(5) Reconnect and solder all wiring connecting the control panel with the remainder of the receiver. See table 7-13 for wiring details. Reconnect connector W1P1 (48) at antenna trimmer connector J2.

(6) Place the tuning shaft of the gear and tuner assembly through the hole in the control panel. Engage the bandswitch shaft and the bandwidth shaft with their respective couplings.

(7) Secure the gear and tuner assembly to the control panel, using three screws (38).

(8) Place the spur gear from the TUNE knob on the TUNE shaft and secure it to the shaft such that there is 0.156 ± 0.005 inch clearance between the spur gear and the stationary gear.

(9) Place the nylon internal tooth gear over the spur gear and onto the stationary gear.

(10) Push the knob body over the rest of the knob assembly.

(11) Refer to paragraph 6-9 for final reassembly procedures.

Section IV. SUBASSEMBLY TESTING

7-10. General

This section contains testing procedures for the various receiver subassemblies. Alignment and adjustment instructions for the subassemblies are also provided. These procedures are used in conjunction with the troubleshooting charts (tables 7-1 through 7-11) to isolate a fault within the subassemblies. Also, the proper functioning of the subassemblies after repair can be verified, using these procedures and the testing procedures of paragraphs 6-13 through 6-16.

7-11. Radio Assembly (A1A1) Testing

Refer to paragraphs 6-13, 6-14, and 6-15 to test and adjust the radio assembly.

7-12. Control Panel Assembly (A1A1A1) Testing

Refer to paragraph 6-16 to test the control panel assembly.

7-13. Gear and Tuner Assembly (A1A1A2) Testing

a. Mechanical Testing.

(1) Rotate the main tuning shaft and observe that all gear assemblies operate without binding and that the dial tape is engaged with the drive gear.

(2) Rotate the main tuning shaft back and forth slightly and observe that there is no backlash between the main tuning shaft and the drive gear for the dial tape. If excessive backlash is noticed, remove the anti-backlash gear from the variable inductor shaft, increase the spring tension in the anti-backlash gear, and reinstall the gear on the variable inductor shaft.

(3) Remove the cover from the RF tuner assembly by removing the attaching screws.

(4) Insert a screwdriver into the slotted shaft of the band switching mechanism. Rotate the screwdriver and observe that the mechanism moves freely, and that the magnets inside of the RF tuner do not strike the reed switches mounted on the circuit cards.

(5) Replace the cover on the RF tuner assembly.

(6) Rotate the main tuning shaft fully counterclockwise. Observe that the line on the dial tape is in the position shown in figure 7-14. If the dial tape does not line up as shown, remove the spring assembly by removing the two screws and slip the dial tape over the drive gear to achieve proper alignment. Replace the spring assembly.

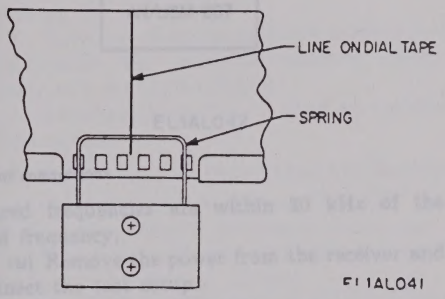

Figure 7-14. Dial tape alignment.

b. Electrical Testing. Refer to paragraph 6-17 for electrical tests for the gear and tuner assembly.

NOTE

Electrical tests and alignment for the gear and tuner assembly can only be performed with the gear and tuner assembly installed in the radio assembly.

c. Alignment.

NOTE

Capacitors are adjusted using the metal tipped tuning tool. All coil adjustments are made using the nonmetallic tuning tool. File a chisel shape on the hexagonal end of the nonmetallic tuning tool so that it fits the slot in the core of transformer T1 of the oscillator-mixer board (A1A1A2A1A6).

(1) *Local oscillator alignment.*

(a) Remove the receiver from the dust cover and remove the if. amplifier, A1A1A3(para 6-6).

(b) Perform the preliminary test set up (para 6-12).

(c) Connect the test equipment as shown in figure 7-15.

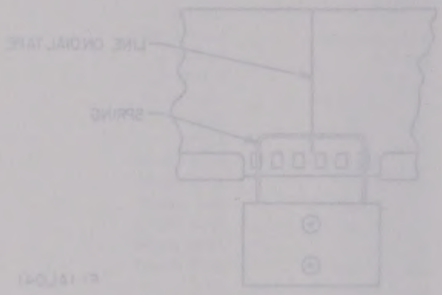

(*d*) Set the receiver FUNCTION switch to CW and the BAND switch to 2.

(*e*) Apply power to the test equipment and allow 15 minutes for warmup.

(*f*) Rotate the main tuning shaft fully counterclockwise.

(*g*) Adjust the cursor until it is aligned with the line on the dial tape, using the CAL ADJ control.

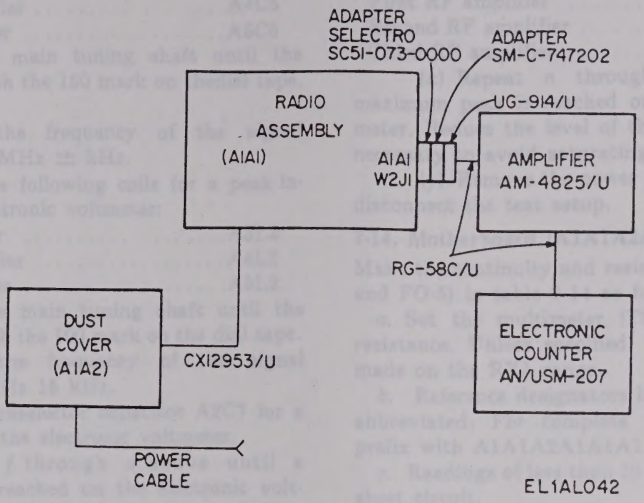

Figure 7-15. Local oscillator alignment connections.

NOTE

See figure FO-20 for location of adjustable components.

(*h*) Turn the main tuning shaft until the cursor is aligned with the 100 mark on the dial tape.

(*i*) Adjust capacitor A6C7 until the electronic counter indicates approximately 110.70 MHz.

(*j*) Turn the main tuning shaft until the cursor is aligned with the 50 mark on the dial tape.

(*k*) Adjust coil A6L1 until the electronic counter indicates approximately 60.70 MHz.

(*l*) Turn the main tuning shaft until the cursor is aligned with the 150 mark on the dial tape.

(*m*) Adjust coil A6L2 until the electronic counter indicates approximately 160.70 MHz.

(*n*) Repeat *h* through *m* above until the measured frequencies are within 75 kHz of the desired frequency.

(*o*) Place the BAND switch in the 1 position.

(*p*) Turn the main tuning shaft until the cursor is aligned with the 46 mark on the dial tape.

(*q*) Adjust capacitor A6C11 until the electronic counter indicates approximately 56.70 MHz.

(*r*) Turn the main tuning shaft until the cursor is aligned approximately 32.70 MHz.

(*s*) Adjust coil A6L3 until the electronic counter indicates approximately 32.70 MHz.

(*t*) Repear *p* through *s* above until the measured frequencies are within 20 kHz of the desired frequency.

(*u*) Remove the power from the receiver and disconnect the test setup.

(2) *RF amplifier alignment.*

(*a*) Perform the preliminary test setup (para 6-

(*b*) Connect the test equipment as shown in figure 6-14.

(*c*) Set the receiver controls as follows:

Control	*Setting*
ANT	2
BAND	2
RF GAIN	Maximum clockwise (no AVC)
FUNCTION	CW

(*d*) Apply power to the test equipment and allow 15 minutes for warmup.

(*e*) Adjust coil A2L2 so that the slug is 1/8 inch from the top of the coil form. No further adjustment of this coil will be necessary.

(*f*) Turn the main tuning shaft until the cursor is aligned with the 50 mark on the dial tape.

(*g*) Adjust the signal generator for cw operation at a frequency of 50.0 MHz 2 kHz and sufficient level for an indication on the electronic voltmeter.

(*h*) Adjust the IF output transformer, A6T1,

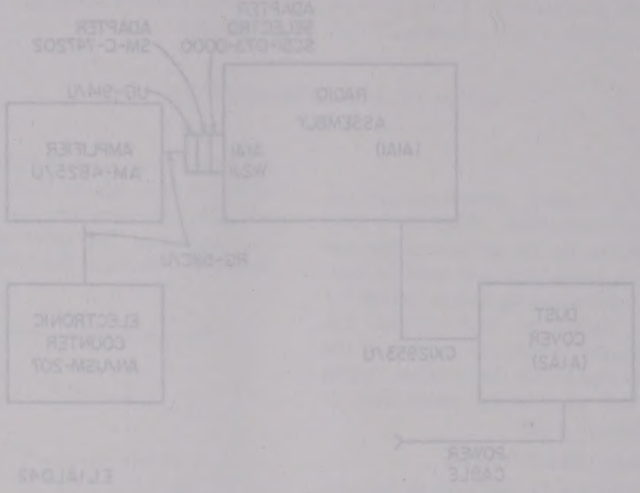

on the side of the tuner housing for a peak indication on the electronic voltmeter.

(*i*) Adjust the following capacitors for a peak indication on the electronic voltmeter (fig. FO-20):

First RF amplifier A3C5
Second RF amplifier A4C5
Third RF amplifier A5C5

(*j*) Turn the main tuning shaft until the cursor is aligned with the 150 mark on thedial tape. dial tape.

(*k*) Adjust the frequency of the signal generator to 150.0 MHz ± kHz.

(*l*) Adjust the following coils for a peak indication on the electronic voltmeter:

First RF amplifier A3L2
Second RF amplifier A4L2
Third RF amplifier A5L2

(*m*) Turn the main tuning shaft until the cursor is aligned with the 100 mark on the dial tape.

(*n*) Adjust the frequency of the signal generator to 100 MHz 15 kHz.

(*o*) Adjust preselector capacitor A2C7 for a peak indication on the electronic voltmeter.

(*p*) Repeat *f* through *o* above until a maximum peak is reached on the electronic voltmeter. Adjust the level of the signal generator as necessary to avoid saturating the rf tuner.

(*q*) Place the BAND switch in the 1 position.

(*r*) Turn the main tuning shaft until the cursor is aligned with the 50 mark on the dial tape.

(*s*) Adjust the frequency of the signal generator to 50.0 MHz 2 kHz.

(*t*) Adjust the following capacitors for a peak indication on the electronic voltmeter:

Preselector A2C4
First RF amplifier A3C10
Second RF amplifier A4C10
Third RF amplifier A5C10

(*u*) Turn the main tuning shaft until the cursor is aligned with the 22 mark on the dial tape.

(*v*) Adjust the frequency of the signal generator to 22.0 MHz ± 2 kHz.

(*w*) Adjust the following coils for a peak indication on the electronic voltmeter:

Preselector A2L1
First RF amplifier A3L3
Second RF amplifier A4L3
Third RF amplifier A5L3

(*x*) Repeat *n* through *s* above until a maximum peak is reached on the electronic voltmeter. Reduce the level of the signal generator as necessary to avoid saturating the RF tuner.

(*y*) Remove the power from the receiver and disconnect the test setup.

7-14. Motherboard (A1A1A2A1A1A1) Testing

Make the continuity and resistance checks (fig. 7-1 and FO-5) in table 7-14 as follows:

a. Set the multimeter (TS-352/U) to measure resistance. Unless specified, all measurements are made on the RX1 range.

b. Reference designators listed in table 7-14 are abbreviated. For complete reference designation prefix with A1A1A2A1A1A1.

c. Readings of less than 10 ohms are considered a short circuit.

7-15. RF Preselector (A1A1A2A1A2) Testing

a. Continuity and Resistance Test (fig. 7-2 and FO-6). Remove the RF preselector circuit card from the RF tuner and make the continuity and resistance checks in table 7-15 as follows:

(1) Set the mulitmeter (TS-352/U) to measure resistance. Unless otherwise specified, all measurements are made on the RX10 range.

(2) Reference designators listed in table 7-15 are abbreviated. For complete reference designation prefix with A1A1A2A1A2.

Table 7-14. Motherboard Continuity and Resistance Checks

Multimeter (+) Lead	Mulitmeter (−) Lead	Reading (ohms)	Remarks
J1	J6-9	0	
J1	C1	Infinite	Top lead
J1	J3-F	Infinite	
J2	J10-6	0	
J2	J3-F	Infinite	
J3-A	E6	0	
J3-C	J7-5	0	
J3-C	J8-5	0	
J3-C	J9-5	0	
J3-E	J7-2	0	
J3-E	J8-2	0	
J3-E	J9-2	0	
J3-F	Ground plane	0	Circuit common
J3-H	J10-9	0	

Multimeter (+) Lead	Multimeter (−) Lead	Reading (ohms)	Remarks
J6-1	J3-F	0	
J6-2	J3-F	0	
J6-3	J3-F	0	
J6-4	E1	0	
J6-5	J7-9	0	
J6-7	J3-F	0	
J6-8	J3-F	0	
J6-10	J3-F	0	
J7-1	J3-F	0	
J7-3	J3-F	0	
J7-4	E2	0	
J7-6	J8-9	0	
J7-8	J3-F	0	
J7-10	J3-F	0	
J8-1	J3-F	0	
J8-3	J3-F	0	
J8-4	E3	0	
J8-6	J9-9	0	
J8-7	J3-F	0	
J8-10	J3-F	0	
J9-1	J3-F	0	
J9-4	E4	0	
J9-6	J10-5	0	
J9-7	J3-F	0	
J9-8	J3-F	0	
J9-10	J3-F	0	
J10-1	J3-F	0	
J10-3	J3-F	0	
J10-4	E5	0	
J10-8	J3-F	0	
J10-10	J3-F	0	

Table 7-15. RF Preselector Continuity and Resistance Checks

Multimeter (+) Lead	Multimeter (−) Lead	Reading (ohms)	Remarks
P1-9	P1-1	Infinite	
P1-4	P1-1	Infinite	
P1-4	P1-5	Infinite	
P1-5	R1, C11 junction	Infinite	
R1, C11 junction	P1-1	1.8K-2.2K	
R1, C11 junction	S2, C9 junction	0	S2 activated, RX1
P1-4	P1-1	0	S1 activated, RX1

(3) Readings of less than 10 ohms are considered a short circuit.

(4) Unless otherwise specified, reed switches S1 and S2 are not activiated.

b. Functional Test.

(1) After performing the resistance and continuity checks, insert the RF preselector in the RF tuner.

(2) Align the RF tuner (para 7-13c).

(3) Test the RF tuner (para 6-17).

(4) If the requirements of paragraph 6-17 are not satisfied, replace the RF preselector circuit card and repeat (2) and (3) above.

7-16. First RF Amplifier (A1A1A2A1A3) Testing

a. Continuity and Resistance Test (fig. 7-3 and FO-7). Remove the first rf amplifier circuit card from the rf tuner and make the continuity and resistance checks in table 7-16 as follows:

(1) Set the multimeter (TS-352/U) to measure resistance. Unless otherwise specified, all measurements are made on the RX10 range.

(2) Reference designators listed in table 7-16 are abbreviated. For complete reference designation prefix with A1A1A2A1A3.

(3) Readings of less than 10 ohms are considered a short circuit.

(4) Unless otherwise specified, reed switches S1 and S2 are not activated.

b. Functional Test.

(1) After performing the resistance and con-

Reference (+/- Lead)	Reference (+/- Lead)	Reading (ohms)	Remarks
J5-1	J5-F	0	
J5-2	J5-F	0	
J5-3	J5-F	0	
J5-4	E3	0	
J5-5	J11-5	0	
J5-7	J5-F	0	
J5-9	J5-F	0	
J5-10	J5-F	0	
J11-1	J5-F	0	
J11-3	J5-F	0	
J11-4	E3	0	
J11-5	J15-5	0	
J11-6	J5-F	0	
J11-10	J5-F	0	
J15-1	J5-F	0	
J15-3	J5-F	0	
J15-4	E3	0	
J15-5	J7-5	0	
J15-7	J5-F	0	
J15-10	J5-F	0	
J7-1	J5-F	0	
J7-4	E4	0	
J7-5	J11-5	0	
J7-7	J5-F	0	
J7-8	J5-F	0	
J7-10	J5-F	0	
J11-1	J5-F	0	
J11-5	J7-5	0	
J11-6	E3	0	
J11-10	J5-F	0	

Table 7-13. RF Preselector Continuity and Resistance Checks

Reference (+/- Lead)	Reference (+/- Lead)	Reading (ohms)	Remarks
P1-6	P1-1	Infinite	
P1-4	P1-1	Infinite	
P1-3	P1-1	Infinite	
P1-2	P1-1	Infinite	
P1-1	R1, C11 junction	Infinite	
R1, C11 junction	P1-1	1.1K-1.2K	
C1, C11 junction	J2, C9 junction	0	S1 activated, RX1
P1-5	P1-1	0	S1 activated, RX2

(3) Readings of less than 10 ohms are considered a short circuit.

(4) Unless otherwise specified, read switches S1 and S2 are not activated.

b. Functional Test.

(1) After performing the resistance and continuity checks, inject the RF preselector in the RF tuner.

(2) Align the RF tuner (para 7-12d).

(3) Test the RF tuner (para 6-17).

(4) If the requirements of paragraph 6-17 are not satisfied, replace the RF preselector circuit card and repeat (2) and (3) above.

7-18. Type RF Amplifier (A1A1A2A1A3) Testing

a. Continuity and Resistance Test (fig. 7-3 and

tinuity checks, insert the first RF amplifier in the RF tuner.

(2) Align the RF tuner (para 7-13c).

(3) Test the RF tuner (para 6-17).

(4) If the requirements of paragraph 6-17 are not satisfied, replace transistor Q1 on the first RF amplifier and repeat (2) and (3) above.

(5) If the requirements of paragraph 6-17 still are not satisfied, replace the first RF amplifier circuit card and repeat (2) and (3) above.

Table 7-16. First RF Amplifier Continuity and Resistance Checks

Multimeter (+) Lead	Multimeter (—) Lead	Reading (ohms)	Remarks
P1-9	P1-1	45K-61K	RX100
P1-2	R1, C1 junction	9.2K-10.8K	RX100
R4, L1 junction	L1, C3 junction	0	
R5, C4 junction	P1-1	900-1100	
P1-4	P1-5	Infinite	
P1-4	P1-6	Infinite	
P1-4	P1-1	Infinite	
P1-6	P1-1	Infinite	RX100
R7, C12 junction	P1-1	900-1100	
L4-R6 junction	P1-1	0	
C11, S2 junction	P1-6	Infinite	
C11, S2 junction	P1-4	0	S1, S2 activated

7-17. Second RF Amplifier (A1A1A2A1A4) Testing

a. Continuity and Resistance Test (fig. 7-4 and FO-8). Remove the second rf amplifier circuit card from the RF tuner and make the continuity and resistance checks in table 7-17 as follows:

(1) Set the multimeter (TS-352/U) to measure resistance. Unless otherwise specified, all measurements are made on the RX10 range.

(2) Reference designators listed in table 7-17 are abbreviated. For complete reference designation prefix with A1A1A2A1A4.

(3) Reading of less than 10 ohms are considered a short circuit.

(4) Unless otherwise specified, reed switches S1 and S2 are not activiated.

b. Functional Test.

(1) After performing the resistance and continuity checks, insert the second rf amplifier in the RF tuner.

(2) Align the RF tuner (para 7-13c).

(3) Test the RF tuner (para 6-17).

(4) If the requirements of paragraph 6-17 are not satisfied, replace transistor Q1 on the second RF amplifier and repeat (2) and (3) above.

(5) If the requirements of paragraph 6-17 are still not satisfied, replace the second RF amplifier circuit card and repeat (2) and (3) above.

Table 7-17. Second RF Amplifier Continuity and Resistance Checks

Multimeter (+) Lead	Multimeter (—) Lead	Reading (ohms)	Remarks
P1-9	P1-1	35K-47K	RX100
P1-2	R1, C1 junction	9.2K-10.8K	RX100
P1-5	R1, C1 junction	184K-216K	RX1000
R4, L1 junction	L, C3 junction	0	
R5, C4 junction	P1-1	900-1100	
P1-4	P1-5	Infinite	
P1-4	P1-6	Infinite	
P1-4	P1-1	Infinite	
P1-6	P1-1	Infinite	RX100
R7, C12 junction	P1-1	275-325	
L4, R6 junction	P1-1	0	
C11, S2 junction	P1-6	Infinite	
C11, S2 junction	P1-4	0	S1, S2 activated

7-18. Third RF Amplifier A1A1A2A1A5) Testing

a. Continuity and Resistance Test (fig. 7-5 and FO-9). Remove the third RF amplifier circuit card from the RF tuner and make the continuity and resistance checks in table 7-18 as follows:

(1) Set the multimeter (TS-352/U) to measure resistance. Unless otherwise specified, all measurements are made on the RX10 range.

(2) Reference designators listed in table 7-18 are

Multimeter (+) Lead	Multimeter (–) Lead	Reading (ohms)	Remarks
P1-3	P1-1	15K-81K	RX100
P1-2	R1, C1 junction	8.2K-10.8K	RX100
J3, L1 junction	L1, C2 junction	0	
R3, C4 junction	P1-1	900-1100	
P1-4	P1-3	Infinite	
P1-4	P1-6	Infinite	
P1-4	P1-1	Infinite	
J1-1	P1-1	Infinite	RX100
R7, C12 junction	P1-1	900-1100	
L4-S6 junction	J1-1	0	
C11, S2 junction	P1-4	Infinite	
C11, S2 junction	P1-4	0	S1, S2 activated

Multimeter (+) Lead	Multimeter (–) Lead	Reading (ohms)	Remarks
P1-3	P1-1	15K-81K	RX100
P1-2	R1, C1 junction	8.2K-10.8K	RX100
J3, L1 junction	L1, C2 junction	0	
R3, C4 junction	P1-1	900-1100	
P1-4	P1-3	Infinite	
P1-4	P1-6	Infinite	
P1-4	P1-1	Infinite	
J1-1	P1-1	Infinite	RX100
R7, C12 junction	P1-1	900-1100	
L4-S6 junction	J1-1	0	
C11, S2 junction	P1-4	Infinite	
C11, S2 junction	P1-4	0	S1, S2 activated

abbreviated. For complete reference designation prefix with A1A1A2A1A5.

(3) Readings of less than 10 ohms are considered a short circuit.

(4) Unless otherwise specified, reed switches S1 and S2 are not activated.

b. Functional Test.

(1) After performing the resistance and continuity checks, insert the third RF amplifier in the RF tuner.

(2) Align the RF tuner (para 7-13c).

(3) Test the RF tuner (para 6-17).

(4) If the requirements of paragraph 6-17 are not satisfied, replace transistor Q1 on the third rf amplifier and repeat (2) and (3) above.

(5) If the requirements of paragraph 6-17 still are not satisfied, replace the third RF amplifier circuit card and repeat (2) and (3) above.

Table 7-18. Third RF Amplifier Continuity and Resistance Checks

Multimeter (+) Lead	Multimeter (−) Lead	Reading (ohms)	Remarks
P1-9	P1-1	43K-50K	RX100
R1, R2 junction	P1-1	100K-148K	RX1000
L1, C2 junction	L1, C3 junction	0	
R6, C4 junction	P1-1	900-1100	
P1-4	P1-5	Infinite	
P1-4	P1-6	Infinite	
P1-4	P1-1	Infinite	
R8, C12 junction	P1-1	275-325	
L4, R7 junction	P1-1	0	
C11, S2 junction	P1-6	Infinite	
C11, S2 junction	P1-4	0	S1, S2 activated

7-19. Oscillator-Mixer (A1A1A2A1A6) Testing

a. Continuity and Resistance Test (fig. 7-6 and FO-10). Remove the oscillator-mixer circuit card from the RF tuner and make the continuity and resistance checks in table 7-19 as follows:

(1) Set the multimeter (TS-352/U) to measure resistance. Unless otherwise specified, all measurements are made on the RX10 range.

(2) Reference designators listed in table 7-19 are abbreviated. For complete reference designation prefix with A1A1A2A1A6.

(3) Readings of less than 10 ohms are considered a short circuit.

(4) Unless otherwise specified, reed switches S1 and S2 are not activated.

b. Functional Test.

(1) After performing the resistance and continuity checks, insert the oscillator-mixer in the RF tuner.

(2) Align the RF tuner (para 7-13c).

(3) Test the RF tuner (para 6-17).

(4) If the requirements of paragraph 6-17 are not satisfied, replace transistors Q1 and Q2 on the oscillator-mixer and repeat (2) and (3) above.

(5) If the requirements of paragraph 6-17 still are not satisfied, replace the oscillator-mixer circuit card and repeat (2) and (3) above.

Table 7-19. Oscillator-Mixer Continuity and Resistance Checks

Multimeter (+) Lead	Multimeter (−) Lead	Reading (ohms)	Remarks
P1-5	P1-1	9.2K-10.8K	
P1-5	P1-7	16.9K-19.8K	RX100
R10, C16 junction	P1-1	430-510	RX1
P1-9	P1-1	500	RX100
C17, Q2-D junction	R7, C15 junction	0	
P1-6	P1-1	0	
P1-4	R7, R9 junction	Infinite	
P1-4	P1-1	Infinite	
P1-4	P1-1	Infinite	
P1-1	R1, R2 junction	1K-1.6K	
R3, C6 junction	P1-1	920-1100	
P1-9	L1, C4 junction	47-55	RX1
P1-4	P1-9	Infinite	
R3, C6 junction	C5, C4 junction	Infinite	
C9, L3 junction	C9, R4 junction	470-550	
P1-4	P1-1	0	S1 activated
C5, C6 junction	S2, R4 junction	0	S2 activated

abbreviated. For complete reference designation prefix with A1A1A2A1A6.

(2) Readings of less than 10 ohms are considered a short circuit.

(4) Unless otherwise specified, reed switches S1 and S2 are not activated.

6. *Functional Test*

(1) After performing the resistance and continuity checks, insert the third RF amplifier in the RF tuner.

(2) Align the RF tuner (para 7-13c).

(3) Test the RF tuner (para 6-17).

(4) If the requirements of paragraph 6-17 are not satisfied, replace transistor Q1 on the third rf amplifier and repeat (2) and (3) above.

(5) If the requirements of paragraph 6-17 still are not satisfied, replace the third RF amplifier circuit card and repeat (2) and (3) above.

Table 7-18. Third RF Amplifier Continuity and Resistance Checks

Multimeter (+) Lead	Multimeter (−) Lead	Reading (ohms)	Remarks
P1-5	P1-1	40K-50K	RX100
R1, R2 junction	P1-1	100K-148K	RX1000
L1, C2 junction	L1, C2 junction	0	
R6, C4 junction	P1-1	900-1100	
P1-4	P1-3	Infinite	
P1-4	P1-6	Infinite	
P1-4	P1-1	Infinite	
R8, C13 junction	P1-1	375-425	
L4, R7 junction	P1-1	0	
C11, S2 junction	P1-6	Infinite	
C11, S2 junction	P1-4	0	S1, S2 activated

7-19. Oscillator-Mixer (A1A1A2A1A6) Testing

a. *Continuity and Resistance Test* (fig. 7-6 and FO-10). Remove the oscillator-mixer circuit card from the RF tuner and make the continuity and resistance checks in table 7-19 as follows:

(1) Set the multimeter (TS-352/U) to measure resistance. Unless otherwise specified, all measurements are made on the RX10 range.

(2) Reference designators listed in table 7-19 are abbreviated. For complete reference designation prefix with A1A1A2A1A6.

(3) Readings of less than 10 ohms are considered a short circuit.

(4) Unless otherwise specified, reed switches S1 and S2 are not activated.

b. *Functional Test.*

(1) After performing the resistance and continuity checks, insert the oscillator-mixer in the RF tuner.

(2) Align the RF tuner (para 7-13c).

(3) Test the RF tuner (para 6-17).

(4) If the requirements of paragraph 6-17 are not satisfied, replace transistors Q1 and Q2 on the oscillator-mixer and repeat (2) and (3) above.

(5) If the requirements of paragraph 6-17 still are not satisfied, replace the oscillator-mixer circuit card and repeat (2) and (3) above.

Table 7-19. Oscillator-Mixer Continuity and Resistance Checks

Multimeter (+) Lead	Multimeter (−) Lead	Reading (ohms)	Remarks
P1-5	P1-1	9.5K-10.5K	
P1-5	P1-7	18.5K-19.5K	RX100
R10, C14 junction	P1-1	450-510	RX1
P1-5	P1-1	950	RX100
C11, Q2-Q junction	R7, C13 junction	0	
P1-6	P1-1	0	
P1-4	R7, R9 junction	Infinite	
P1-4	P1-1	Infinite	
P1-4	P1-1	Infinite	
P1-1	R1, R2 junction	1K-1.6K	
R1, C6 junction	P1-1	950-1100	
P1-5	L1, C4 junction	4.5K	RX1
P1-4	P1-9	Infinite	
R1, C6 junction	C5, C4 junction	Infinite	
C9, L2 junction	C9, R4 junction	470-540	
P1-4	P1-4	0	S1 activated
C9, C9 junction	S2, R4 junction	0	S2 activated

7-20. IF Amplifier Assembly (A1A1A3) Testing

a. Electrical Tests. Refer to paragraph 6-18 for if. assembly testing.

b. Alignment (fig. 7-7).

(1) Perform the preliminary test procedure (para 6-18*a*).

(2) Adjust the signal generator for a cw output at 10.7 MHz ±1 kHz, and a sufficient level for an indication on the electronic voltmeter.

(3) Adjust potentiometer R8 for maximum output, fully counterclockwise.

NOTE

Adjust the signal generator level as necessary in order to avoid limiting when adjusting coils L3 and L4.

(4) Adjust coils L3 and L4 for a peak indication on the electronic voltmeter.

c. Voltage Measurements (fig. 7-7 and FO-11).

(1) *Preliminary.*

(*a*) Perform the preliminary test procedure (para 6-18*a*).

(*b*) Remove the module cover from the IF amplifier.

(2) *Quiescent voltages.* With no input signal and the front panel RF GAIN control fully clockwise (no AVC), perform the dc voltage measurements listed in table 7-20 as follows:

(*a*) Connect the digital voltmeter between the IF amplifier chassis and the indicated test points. The digital voltmeter should indicate within the limits listed in table 7-20.

Table 7-20. IF Amplifier Quiescent Voltages

Device	Terminal	Dc volts	Remarks
U1	1	2.45-3.67	
	2	1.80-2.72	
	3	0	
	4	0	
	5	3.0-4.6	Same as TP2
	6	11.0-11.4	
	7	0	
	8	3.8-7.0	
	9	11.0-11.4	
	10	3.6-6.8	
U2	1	2.45-3.67	
	2	1.80-2.72	
	3	0	
	4	0	
	5	3.0-4.6	Same as TP2
	7	0	
	8	3.8-7.0	
	9	11.0-11.4	
	10	3.6-3.8	
Q1	Base	3.5-5.2	
	Emitter	3.0-4.5	
	Collector	3.0-4.6	Same as TP2

(*b*) Reference designators shown in table 7-20 are abbreviated. For complete reference designation prefix with A1A1A3.

(*c*) Voltage measurements of less than 0.1 volts are considered the same as 0 volt.

(3) *Dynamic voltages* (fig. 7-7 and FO-20). Adjust potentiometer R8 for maximum output, fully counterclockwise and perform the measurements listed in table 7-21 under the test conditions listed as follows:

(*a*) Use the electronic voltmeter (AN/URM-145) with the high impedance probe for ac voltage measurements, and the digital voltmeter (AN/GSM-64) for dc voltage measurements.

(*b*) Adjust the signal generator for a frequency of 10.7 MHz ± kHz, in the cw mode.

(*c*) Reference designators used in table 7-21 are abbreviated. For complete reference designation, prefix with A1A1A3.

(*d*) All voltages are measured with respect to chassis common.

7-21. Detector Assembly (A1A1A4) Testing

a. Electrical Tests. Refer to paragraph 6-19 for detector assembly testing.

b. Alignment.

(1) Perform the preliminary test procedure (para 6-19*a*).

(2) Place the front panel FUNCTION switch in the AM position.

(3) With the signal generator (AN/USM-44B) connected in the test setup, adjust the generator for a frequency of 10.7 MHz ±1 kHz, with 1 kHz, 30 percent modulation and a level of 50 millivolts.

Table 7-21. IF Amplifier Dynamic Voltages

Test Point	Indication	Test conditions
P3-A	11.0-11.4 vdc	All conditions
P3-B	0	All conditions
P3-C	5.4-8.6 vdc	All conditions
P3-H	0.01 vdc maximum	RF GAIN counterclockwise
	5.4-8.6 vdc	RF GAIN clockwise (no AVC)
TP2	1.0-5.0 vdc	RF GAIN clockwise (no AVC) BANDWIDTH = 10 kHz TP1 = 0.5 millivolts, 10.7 MHz
C18, C21 junction	7.13 mv ac	BANDWIDTH = 10 kHz TP1 = 25 millivolts, 10.7 MHz
C18, C21 junction	5-10 mv ac	BANDIWDTH = 75 kHz TP1 = 25 millivolts, 10.7 MHz
C8, C9 junction	25-45 mv ac	BANDWIDTH = 10 kHz TP1 = 0.5 millivolts, 10.7 MHz RF GAIN clockwise (no AVC)
TP3	0.5 vac minimum	BANDWIDTH - 10 kHz TP1 - 0.5 milllivolts, 10.7 MHz RF GAIN clockwise (no AVC)

(4) With the electronic voltmeter connected to the AUDIO output and the front panel VOL control at midrange, adjust coil L2 (fig. FO-20) for a peak indication on the electronic voltmeter.

(5) Place the front panel FUNCTION switch in the CW position.

(6) With the signal generator (AN/USM-44B) connected in the test setup, adjust the generator for a frequency of 10.7 MHz ±500 Hz, with a cw output of 50 millivolts.

(7) With the electronic voltmeter connector to the AUDIO output and the front panel VOL control at midrange, adjust capacitor C39 for a peak indication on the electronic voltmeter.

(8) Place the front panel FUNCTION switch in the FM position.

(9) With the FM signal generator connected to the test setup, adjust the generator for a frequency of 10.7 MHz ±1 kHz with 1 kHz modulating frequency deviated 15 kHz and a level of 50 millivolts.

(10) With the electronic voltmeter connected to the AUDIO output and the front panel VOL control at midrange, adjust coil L6 for a peak indication on the electronic voltmeter.

(11) Potentiometer R14 is adjusted at the radio assembly (A1A1) level. See paragraph 6-14*b* for adjustment.

c. Voltage Measurements (fig. 7-8 and FO-12).

(1) *Preliminary.*

(*a*) Perform the preliminary test procedure (para 6-19*a*).

(*b*) Remove the cover from the detector assembly.

(2) *Quiescent voltages.* With no input signal, and the front panel FUNCTION switch set at AM and the RF GAIN control fully clockwise, perform the dc voltage measurements listed in table 7-22 as follows:

(*a*) Connect the digital voltmeter (AN/GSM-64) between the detector chassis and the indicated test points. The digital voltmeter should indicate within the limits listed in table 7-22.

(*b*) Voltage measurements of less than 0.1 volts are considered the same as 0 volts.

(*c*) Reference designators shown in table 7-22 are abbreivated. For complete reference designation, prefix with A1A1A4.

(3) *Dynamic voltages* (fig. 7-8). Perform the measurements listed in table 7-23 under the test condition listed as follows:

(*a*) Use the electronic voltmeter (AN/URM-145) with the high impedance probe for all 10.7 MHz measurements, the electronic voltmeter (ME-30E/U) for all audio frequency measurements, and the digital voltmeter for dc voltage measurements.

(*b*) All voltages are measured with respect to chassis common.

(*c*) The signal generator frequency shall be 10.7 MHz ± kHz and the level shall be 9.0 millivolts, as measured at test point TP1, for all modes.

(*d*) When the front panel FUNCTION switch is in the AM mode, the signal generator modulation shall be 1 kHz, 30 percent modulation.

(*e*) When the front panel FUNCTION switch is in the FM mode, the signal generator modulation shall be 1 kHz, 15 kHz deviated.

(*f*) When the front panel FUNCTION switch is in the CW mode, the signal generator shall have no modulation.

(*g*) Reference designators used in table 7-23 are abbreviated. For complete reference designation prefix with A1A1A4.

Table 7-21. IF Amplifier Dynamic Voltages

Test Point	Indication	Test conditions
P2-A	11.0-11.4 vdc	All conditions
P2-B	0	All conditions
P2-C	6.4-6.8 vdc	All conditions
P2-H	0.01 vdc maximum	RF GAIN counterclockwise
	6.4-6.8 vdc	RF GAIN clockwise (no AVC)
TP1	1.0-6.0 vdc	RF GAIN clockwise (no AVC)
		BANDWIDTH = 10 kHz
		TP1 = 0.5 millivolts, 10.7 MHz
C18, C21 junction	7-12 mv ac	BANDWIDTH = 10 kHz
		TP1 = 25 millivolts, 10.7 MHz
C18, C22 junction	5-10 mv ac	BANDWIDTH = 75 kHz
		TP1 = 25 millivolts, 10.7 MHz
C8, C9 junction	25-45 mv ac	BANDWIDTH = 10 kHz
		TP1 = 0.5 millivolts, 10.7 MHz
		RF GAIN clockwise (no AVC)
TP2	0.5 vac minimum	BANDWIDTH = 10 kHz
		TP1 = 0.5 millivolts, 10.7 MHz
		RF GAIN clockwise (no AVC)

(4) With the electronic voltmeter connected to the AUDIO output and the front panel VOL control at midrange, adjust coil L2 (fig. FO-20) for a peak indication on the electronic voltmeter.

(5) Place the front panel FUNCTION switch in the CW position.

(6) With the signal generator (AN/USM-44B) connected in the test setup, adjust the generator for a frequency of 10.7 MHz ±500 Hz, with a cw output of 50 millivolts.

(7) With the electronic voltmeter connector to the AUDIO output and the front panel VOL control at midrange, adjust capacitor C39 for a peak indication on the electronic voltmeter.

(8) Place the front panel FUNCTION switch in the FM position.

(9) With the FM signal generator connected to the test setup, adjust the generator for a frequency of 10.7 MHz ±1 kHz with 1 kHz modulating frequency deviated 15 kHz and a level of 60 millivolts.

(10) With the electronic voltmeter connected to the AUDIO output and the front panel VOL control at midrange, adjust coil L6 for a peak indication on the electronic voltmeter.

(11) Potentiometer R14 is adjusted at the radio assembly (A1A1) level. See paragraph 6-14b for adjustment.

c. *Voltage Measurements* (fig. 7-8 and FO-12).

(1) *Preliminary.*

(a) Perform the preliminary test procedure (para 6-19a).

(b) Remove the cover from the detector assembly.

(2) *Quiescent voltages.* With no input signal, and the front panel FUNCTION switch set at AM and the RF GAIN control fully clockwise, perform the dc voltage measurements listed in table 7-22 as follows:

(a) Connect the digital voltmeter (AN/GSM-64) between the detector chassis and the indicated test points. The digital voltmeter should indicate within the limits listed in table 7-22.

(b) Voltage measurements of less than 0.1 volts are considered the same as 0 volts.

(c) Reference designators shown in table 7-22 are abbreviated. For complete reference designation, prefix with A1A1A4.

(3) *Dynamic voltages* (fig. 7-8). Perform the measurements listed in table 7-23 under the test condition listed as follows:

(a) Use the electronic voltmeter (AN/URM-145) with the high impedance probe for all 10.7 MHz measurements, the electronic voltmeter (ME-30E/U) for all audio frequency measurements, and the digital voltmeter for dc voltage measurements.

(b) All voltages are measured with respect to chassis common.

(c) The signal generator frequency shall be 10.7 MHz ± kHz and the level shall be 9.0 millivolts, as measured at test point TP1, for all modes.

(d) When the front panel FUNCTION switch is in the AM mode, the signal generator modulation shall be 1 kHz, 30 percent modulation.

(e) When the front panel FUNCTION switch is in the FM mode, the signal generator modulation shall be 1 kHz, 15 kHz deviated.

(f) When the front panel FUNCTION switch is in the CW mode, the signal generator shall have no modulation.

(g) Reference designators used in table 7-23 are abbreviated. For complete reference designation prefix with A1A1A4.

Table 7-22. Detector Quiescent Voltage

Device	Terminal	Dc volts	Remarks
	NOTE See paragraph 7-21c(2) for additional test condition information.		
U1	1	2.5-3.8	
	2	1.8-2.8	
	4	0	
	5	0	
	6	11.0-11.4	
	7	0	
	8	4.0-6.0	
	9	11.0-11.4	
	10	3.6-6.8	
U2	1	0.3-1.0	
	2	1.0-1.6	
	3	11.0-11.4	
	4	0.3-1.0	
	5	0	
	6	0	
	7	1.1-1.7	
	8	1.1-1.7	
	9	0.3-1.0	
	10	4.5-6.7	
	11	0.3-1.0	
	13	6.2-9.4	
	14	0.6-1.1	
	15	4.0-6.0	
	16	11.0-11.4	
U3	1	1.5-2.4	FUNCTION switch to FM
	2	1.5-2.4	FUNCTION switch to FM
	3	0	FUNCTION switch to FM
	4	0	FUNCTION switch to FM
	5	9.0-11.2	FUNCTION switch to FM
	6	0-0.6	FUNCTION switch to FM
	8	4.2-6.4	FUNCTION switch to FM
	9	2.8-4.2	FUNCTION switch to FM
	10	2.8-4.2	FUNCTION switch to FM
	11	0-0.3	FUNCTION switch to FM
	12	3.6-5.5	FUNCTION switch to FM
	13	0.1-0.6	FUNCTION switch to FM
	14	0.8-1.7	FUNCTION switch to FM
U4	1	4.3-6.5	FUNCTION switch to CW
	2	1.4-2.3	FUNCTION switch to CW
	3	0	FUNCTION switch to CW
	4	1.0-1.5	FUNCTION switch to CW
	5	4.3-6.5	FUNCTION switch to CW
	6	5.3-8.0	FUNCTION switch to CW
	7	4.4-6.6	FUNCTION switch to CW
	9	11.0-11.4	FUNCTION switch to CW
U5	1	0	FUNCTION switch to AM
	2	7-9.5	FUNCTION switch to AM
	3	7-9.5	FUNCTION switch to AM
	4	0	FUNCTION switch to AM
	5	0	FUNCTION switch to AM
	6	7-9.5	FUNCTION switch to AM
	7	14.0-19.0	FUNCTION switch to AM
	8	0	FUNCTION switch to AM
Q1	Base	0.7-1.1	FUNCTION switch to AM
	Emitter	0.1-0.5	FUNCTION switch to AM
	Collector	0.3-0.6	FUNCTION switch to AM
Q2	Base	4.3-6.3	FUNCTION switch to CW
	Emitter	3.7-5.7	FUNCTION switch to CW
	Collector	11.0-11.4	FUNCTION switch to CW
	Case	0	FUNCTION switch to CW

Device	Terminal	Be volo	Remarks
		NOTE	
		See paragraph 7-21(d) for additional user condition information.	
01	1	2.5-5.5	
	2	1.5-2.5	
	4	0	
	5	0	
	6	11.0-11.4	
	7	0	
	8	4.0-5.0	
	9	11.0-11.4	
	10	2.5-5.5	
02	1	0.5-1.0	
	2	1.0-1.5	
	3	11.0-11.4	
	4	0.5-1.0	
	5	0	
	6	0	
	7	1.1-1.7	
	8	1.1-1.7	
	9	0.5-1.0	
	10	4.8-5.7	
	11	0.5-1.0	
	13	5.2-5.4	
	14	0.8-1.1	
	15	4.0-5.0	
	16	11.0-11.4	
03	1	1.5-2.4	FUNCTION switch to PM
	3	1.5-2.4	FUNCTION switch to PM
	5	0	FUNCTION switch to PM
	6	0	FUNCTION switch to PM
	8	0.5-1.5	FUNCTION switch to PM
	9	0.0-0	FUNCTION switch to PM
	10	4.2-5.4	FUNCTION switch to PM
	11	3.5-4.5	FUNCTION switch to PM
	12	2.5-4.5	FUNCTION switch to PM
	13	0.0-0	FUNCTION switch to PM
	15	2.5-4.5	FUNCTION switch to PM
	16	0.1-0.6	FUNCTION switch to PM
	17	0.4-1.7	FUNCTION switch to PM
04	1	1.5-2.5	FUNCTION switch to CW
	2	1.4-2.3	FUNCTION switch to CW
	3	0	FUNCTION switch to CW
	4	1.0-1.5	FUNCTION switch to CW
	5	4.3-5.0	FUNCTION switch to CW
	6	3.5-4.5	FUNCTION switch to CW
	7	4.5-5.5	FUNCTION switch to CW
	8	11.0-11.4	FUNCTION switch to CW
05	1	0	FUNCTION switch to AM
	2	7.0-7.5	FUNCTION switch to AM
	3	7.0-7.5	FUNCTION switch to AM
	4	0	FUNCTION switch to AM
	5	0	FUNCTION switch to AM
	6	7.0-7.5	FUNCTION switch to AM
	7	10.0-10.5	FUNCTION switch to AM
	8	0	FUNCTION switch to AM
01	Base	7.1-7.7	FUNCTION switch to AM
	Emitter	6.7-6.8	FUNCTION switch to AM
	Collector	6.5-6.6	FUNCTION switch to AM
02	Base	6.2-6.8	FUNCTION switch to CW
	Emitter	6.7-6.7	FUNCTION switch to CW
	Collector	11.0-11.4	FUNCTION switch to CW
	Case	0	FUNCTION switch to CW

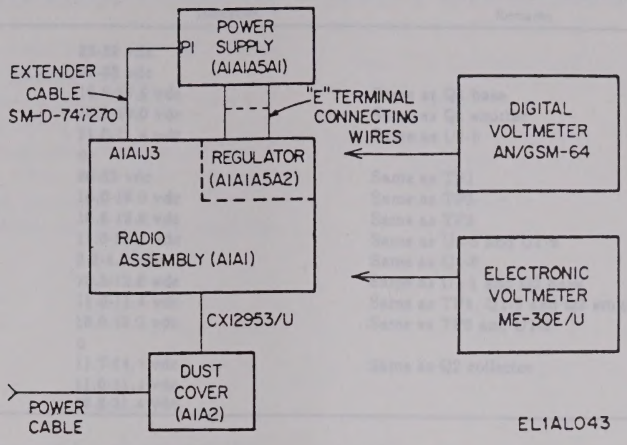

Figure 7-16. Power supply voltage measurement connections.

(*f*) Set the receiver front panel controls as follows:

Control	Setting
RF GAIN	Clockwise (no AVC)
VOL	Clockwise
LITE	OFF
FUNCTION	FM

(2) *115 vac 60 Hz voltage tests.* Perform the voltage measurements listed in table 7-24 as follows:

(*a*) Use the digital voltmeter for all dc voltage measurements.

(*b*) All dc voltages are measured with respect to chassis common.

(*c*) Use the electronic voltmeter (ME-30E/U) for all ac voltage measurements. Be sure the voltmeter case is not grounded when making measurements.

(*d*) Voltage measurements of less than 0.1 volts are considered the same as 0 volt.

(*e*) Reference designators shown in table 7-24 are abbreviated. For complete reference designation, prefix with A1A1A5A1 for the power supply circuit card or A1A1A5A2 for the regulator circuit card.

(*f*) Use Power Cable CX-10956/U connected to a nominal 115 vac, 60-Hz power source for the measurements in table 7-24.

(3) *Vehicular power voltage tests.* Perform the voltage measurements listed in table 7-25 for the same conditions listed in (2) above, except use a nominal 24-volt dc vehicular power source. Use Power Cable CX-10958/U.

Table 7-24. Power Supply Ac Voltage Measurements

Test point	Indication	Remarks
P1-A to P1-P	26-40 vac	
TP1	30-50 mdc	
TP2	16.6-19.6 vdc	Same as Q1 base
TP3	16.0-19.0 vdc	Same as Q1 emitter
TP4	11.0-11.4 vdc	Sams as U1-5
E1	0	
E2	30-50 vdc	Same as TP1
E3	16.0-19.0 vdc	Same as TP3
E4	16.6-19.6 vdc	Same as TP2
E5	11.0-11.4 vdc	Sams as U1-6 and U1-9
E6	3.1-4.0 vdc	Same as U1-8
E7	10.5-12.8 vdc	Same as U1-1 and Q2 base
E8	11.0-11.4 vdc	Same as TP4, U1-5, Q2 emitter
E9	16.0-19.0 vdc	Same as TP3, U1-3
U1-2	0	
U1-4	11.7-14.4 vdc	Same as Q2 collector
U1-7	11.0-11.4 vdc	
Q1 collector	29.4-49.4 vdc	

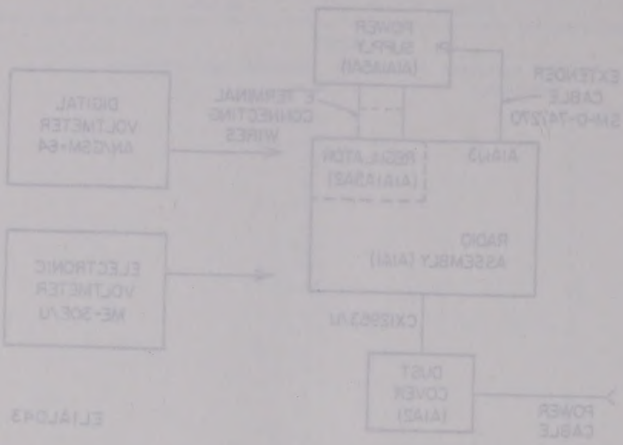

Figure 2-16. Power supply voltage measurement connections.

(j) Set the receiver front panel controls as follows:

Control	Setting
RF GAIN	Clockwise
VOL	Clockwise
LITE	OFF
FUNCTION	PM

(2) 115 vac 60 Hz voltage tests. Perform the voltage measurements listed in table 2-24 as follows:

(a) Use the digital voltmeter for all dc voltage measurements.

(b) All dc voltages are measured with respect to chassis common.

(c) Use the electronic voltmeter (ME-30E/U) for all ac voltage measurements. Be sure the voltmeter case is not grounded when making measurements.

(d) Voltage measurements of less than 0.1 volts are considered the same as 0 volt.

(e) Reference designators shown in table 2-24 are abbreviated. For complete reference designation, prefix with A1A1A5A1 for the power supply circuit card or A1A1A5A2 for the regulator circuit card.

(f) Use Power Cable CX-10958/U connected to a nominal 115 vac, 60-Hz power source for the measurements in table 2-24.

(3) Vehicular power voltage tests. Perform the voltage measurements listed in table 2-25 for the same conditions listed in (2) above, except use a nominal 24-volt dc vehicular power source. Use Power Cable CX-10958/U.

Table 2-24. Power Supply dc Voltage Measurements

Test point	Indications	Remarks
P1-A to P1-F	15-60 vac	
TP1	50-60 mdc	
TP2	18.5-19.5 vdc	Same as Q1 base
TP3	18.0-19.0 vdc	Same as Q1 emitter
TP4	11.0-11.4 vdc	Same as U1-8
E1	0	
E2	30-60 vdc	Same as TP1
E3	18.5-19.0 vdc	Same as TP2
E4	18.0-19.0 vdc	Same as TP3
E5	11.0-11.4 vdc	Same as U1-8 and U1-9
E6	3.1-4.0 vdc	Same as U1-6
E7	10.8-12.0 vdc	Same as U1-1 and Q2 base
E8	11.0-11.4 vdc	Same as TP3, U1-8, Q2 emitter
E9	10.0-10.6 vdc	Same as TP3, U1-9
E10	0	
E11	11.7-12.4 vdc	Same as Q2 collector
E12	11.0-11.4 vdc	
Q2 emitter	22.4-23.6 vdc	

Table 7-25. Power Supply Dc Voltage Measurements

Test point	Indication	Remarks
P1-K	22-32 vdc	
TP1	20-32 vdc	
TP2	16.6-19.6 vdc	Same as Q1 base
TP3	16.0-19.0 vdc	Same as Q1 emitter
TP4	11.0-11.4 vdc	Same as U1-5
E1	0	
E2	20-32 vdc	Same as TP1
E3	16.0-19.0 vdc	Same as TP3
E4	16.6-19.6 vdc	Same as TP2
E5	11.0-11.4 vdc	Same as U1-6 and U1-9
E6	3.2-4.0 vdc	Same as U1-8
E7	10.5-12.8 vdc	Same as U1-1 and Q2 base
E8	11.0-11.4 vdc	Same as TP4, U1-5 and Q2 emitter
E9	16.0-19.0 vdc	Same as TP3 and U1-3
U1-2	0	
U1-4	11.7-14.1 vdc	Same as Q2 collector
U1-7	11.0-11.4 vdc	
Q1 collector	19.8-31.4 vdc	

7-23. Calibration Oscillator Assembly (A1A1A6) Testing

a. Electrical Tests. Refer to paragraph 6-21 for assembly testing.

b. Voltage Measurements (fig. 7-11 and FO-14).

(1) *Preliminary.*

(*a*) Perform the preliminary test setup (para 6-12).

(*b*) Remove the calibration oscillator assembly from the receiver by removing the two screws at opposite corners of the assembly.

(*c*) Remove the assembly cover by removing the two screws in the circuit card.

(*d*) Replace the circuit card in the receiver and attach a short jumper wire from the receiver chassis to the circuit card ground near one of the mounting holes.

(*e*) Connect the equipment as shown in figure 7-17.

(*f*) Set the receiver FUNCTION switch to CAL.

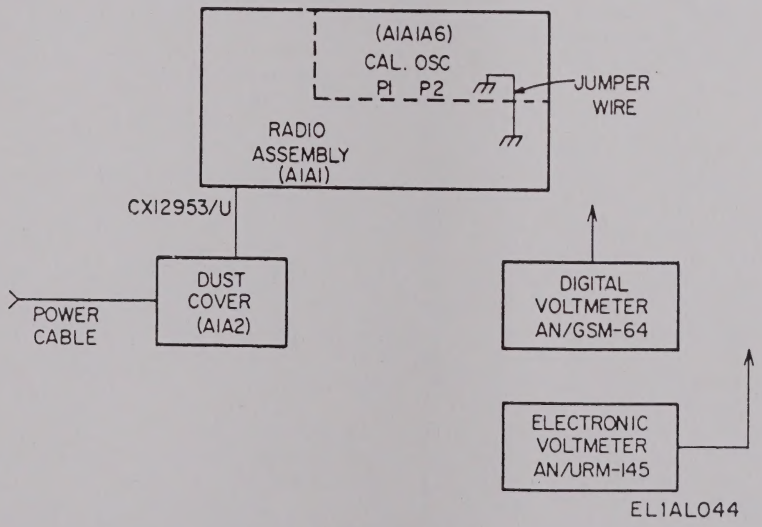

Figure 7-17. Calibration oscillator voltage measurement connections.

(2) *Voltage tests.* Perform the voltage measurements listed in table 7-26 as follows:

(*a*) Use the digital voltmeter for all dc voltage measurements.

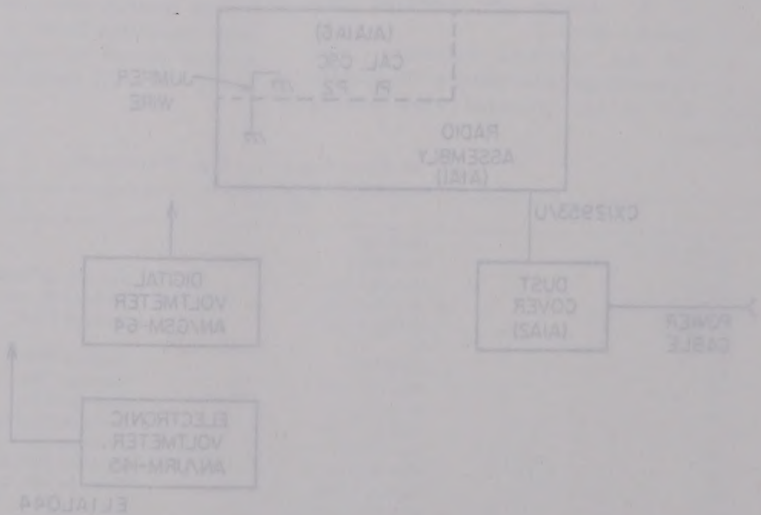

(*b*) All voltages are measured with respect to chassis common.

(*c*) Use the electronic voltmeter (AN/URM-145) for all ac voltage measurements.

(*d*) Voltage measurements of less than 0.1 volt are considered the same as 0.

(*e*) Reference designators shown in table 7-26 are abbreviated. For complete reference designation, prefix with A1A1A6.

(3) Disconnect the test setup and reinstall the calibration oscillator assembly in the receiver by reversing the procedure given in *b* (1) above.

Table 7-26. Calibration Oscillator Voltage Measurements

Test point	Indication
TP1	2.0 vac minimum
Q1-emitter	5-7 vdc
Q1-base	4.7-6.7 vdc
Q1-collector	0
Q1-case	0

APPENDIX A

REFERENCES

DA Pam 310-1	Consolidated Index of Army Publications and Blank Forms.
TB 43-0118	Field Instructions for Painting and Preserving Electronics Command Equipment Including Camouflage Pattern Painting of Electrical Equipment Shelters.
TM 11-5820-807-14&P	Operator's, Organizational, Direct Support, and General Support Maintenance Manual (Including Repair Parts and Special Tools List) Accessory Kit MK-1517/UR (NSN 5820-00-001-9328).
TM 11-6625-320-12	Operator's and Organizational Maintenance Manual: Voltmeter, Meter ME-30A/U and Voltmeters, Electronic ME-30B/U, ME-30C/U, and ME-30E/U.
TM 11-6625-366-15	Operator's, Organizational, Direct Support, General Support, and Depot Maintenance Manual: Multimeter TS-352B/U (NSN 6625-00-553-0142).
TM 11-6625-444-15	Operator's Organizational, Direct Support, General Support, and Depot Maintenance Manual: Digital Voltmeter AN/GSM-64.
TM 11-6625-508-10	Operator's Manual: Signal Generators AN/USM-44 and AN/USM-44A.
TM 11-6625-524-14-2	Operator's Organizational, Direct Support, and General Support Maintenance Manual: Voltmeter, Electronic AN/URM-145B (NSN 6625-00-437-4865).
TM 11-6625-700-10	Operator's Manual: Digital Readout, Electronic Counter AN/USM-207 (NSN 6625-00-911-6368).
TM 11-6625-1703-15	Operator's, Organizational, Direct Support, General Support, and Depot Maintenance Manual: Oscilloscope AN/USM-281A (NSN 6625-00-228-2201).
TM 38-750	The Army Maintenance Management System (TAMMS).
TM 740-90-1	Administrative Storage of Equipment.
TM 750-244-2	Procedures for Destruction of Electronics Material to Prevent Enemy Use (Electronics Command).

APPENDIX A

REFERENCES

DA Pam 310-1	Consolidated Index of Army Publications and Blank Forms.
TB 43-0118	Field Instructions for Painting and Preserving Electronic Command Equipment Including Camouflage Patterns Painting of Electrical Equipment Shelters.
TM 11-5820-401-14&P	Operator's, Organizational, Direct Support, and General Support Maintenance Manual (Including Repair Parts and Special Tools List) Accessory Kit MK-1517/UR (NSN 5820-00-001-9128).
TM 11-6625-320-13	Operator's and Organizational Maintenance Manual: Voltmeter, Meter ME-30A/U and Voltmeters, Electronic ME-302A/U, ME-302C/U, and ME-302E/U.
TM 11-6625-366-13	Operator's, Organizational, Direct Support, General Support, and Depot Maintenance Manual: Multimeter TS-1228/U (NSN 6625-00-537-0142).
TM 11-6625-444-13	Operator's Organizational, Direct Support, General Support, and Depot Maintenance Manual: Digital Voltmeter AN/USM-44.
TM 11-6625-508-10	Operator's Manual: Signal Generators AN/USM-44 and AN/USM-44A.
TM 11-6625-524-14-2	Operator's Organizational, Direct Support, and General Support Maintenance Manual: Voltmeter, Electronic AN/URM-143A (NSN 6625-00-437-4825).
TM 11-6625-700-10	Operator's Manual: Digital Readout, Electronic Counter AN/USM-207 (NSN 6625-00-911-6368).
TM 11-6625-1703-13	Operator's, Organizational, Direct Support, General Support, and Depot Maintenance Manual: Oscilloscope AN/USM-281A (NSN 6625-00-228-2201).
TM 38-750	The Army Maintenance Management System (TAMMS).
TM 740-90-1	Administrative Storage of Equipment.
TM 750-244-2	Procedures for Destruction of Electronic Material to Prevent Enemy Use (Electronics Command).

APPENDIX B

MAINTENANCE ALLOCATION

Section I. INTRODUCTION

B-1. General

This appendix provides a summary of the maintenance operations for AN/URR-71. It authorizes categories fo maintenance for specific maintenance functions on reparable items and components and the tools and equipment required to perform each function. This appendix may be used as an aid in planning maintenance operations.

B-2. Maintenance Function

Maintenance functions will be limited to and defined as follows:

a. Inspect. To determine the serviceability of an item by comparing its physical, mechanical, and/or electrical characteristics with established standards through examination.

b. Test. To verify serviceability and to detect incipient failure by measuring the mechanical or electrical characteristics of an item and comparing those characteristics with prescribed standards.

c. Service. Operations required periodically to keep an item in proper operating condition, i.e., to clean, preserve, drain, paint, or to replenish fuel/lubricants/hydraulic fluids or compressed air supplies.

d. Adjust. Maintain within prescribed limits by bringing into proper or exact position, or by setting the operating characteristics to the specified parameters.

e. Align. To adjust specified variable elements of an item to about optimum or desired performance.

f. Calibrate. To determine and cause corrections to be made or to be adjusted on instruments or test measuring and diagnostic equipment used in precision measurement. Consists of the comparison of two instruments, one of which is a certified standard of known accuracy, to detect and adjust any discrepancy in the accuracy of the instrument being compared.

g. Install. The act of emplacing, seating, or fixing into position an item, part, module (component or assembly) in a manner to allow the proper functioning of the equipment/system.

h. Replace. The ace of substituting a serviceable like-type part, subassembly, model (component or assembly) for an unserviceable counterpart.

i. Repair. The application of maintenance services (inspect, test, service, adjust, align, calibrate, replace) or other maintenance actions (welding, grinding, riveting, straightening, facing, remachining, or resurfacing) to restore serviceability to an item by correcting specific damage, fault, malfunction, or failure in a part, subassembly, module/component/assembly, end item or system. This function does not include the trial and error replacement of running spare type items such as fuses, lamps, or electron tubes.

j. Overhaul. That periodic maintenance effort (service/action) necessary to restore an item to a completely serviceable/operational condition as prescribed by maintenance standards (e.g., DMWR) in appropriate technical publications. Overhaul is normally the highest degree of maintenance performed by the Army. Overhaul does not normally return an item to like-new condition.

k. Rebuild. Consists of those services/actions necessary for the restoration of unserviceable equipment to a like-new condition in accordance with original manufacturing standards. Rebuild is the highest degree of material maintenance applied to Army equipment. The rebuild operation includes the act of returning to zero those age measurements (hours, miles, etc) considered in classifying Army equipment/components.

B-3. Column Entries.

a. Column 1, Group Number. Column 1 lists group numbers, the purpose of which is to identify components, assemblies, subassemblies and modules with the next higher assembly.

b. Column 2, Component/Assembly. Column 2 contains the noun names of components, assemblies, subassemblies, and modules for which maintenance is authorized.

c. Column 3, Maintenance Functions. Column 3 lists the functions to be performed on the item listed in column 2. When items are listed without maintenance functions, it is solely for purpose of having the group numbers in the MAC and RPSTL coincide.

d. Column 4, Maintenance Category. Column 4 specifies, by the listing of a "worktime" figure in the appropriate subcolumn(s), the lowest maintenance function at the indicated category of maintenance. If

APPENDIX B

MAINTENANCE ALLOCATION

Section I. INTRODUCTION

B-1

the number or complexity of the tasks within the listed maintenance function vary at different maintenance categories, appropriate "worktime" figures will be shown for each category. The number of man-hours specified by the "worktime" figure represents the average time required to repair an item (assembly, subassembly, component, module, end item or system) to a serviceable condition under typical field operating conditions. This time includes preparation time, troubleshooting time and quality assurance/quality control time in addition to the time required to perform the specific tasks identified for the maintenance functions authorized in the maintenance allocation chart. Boards, cards, and modules to be repaired at Specialized Repair Activities (SRAs) are designated by code "L" placed next to the "worktime" in subcolumn "H" of column 4. This also is supplemented with a footnote stating that the particular repair will be performed by SRAs. Subcolumns of column 4 are as follows:

C — Operator/Crew
O — Organizational
F — Direct Support
H — General Support
D — Depot

e. Column 5, Tools and Equipment. Column 5 specifies by code, those common tool sets (not individual tools) and special tools, test, and support equipment required to perform the designated function.

B-4. Tool and Test Equipment Requirements (Table 1)

a. Tool or Test Equipment Reference Code. The numbers in this column coincide with the numbers used in the tools and equipment column of the MAC. The numbers indicate the applicable tool or test equipment for the maintenance functions.

b. Maintenance Category. The codes in this column indicate the maintenance category allocated the tool or test equipment.

c. Nomenclature. This column lists the noun name and nomenclature of the tools and test equipment required to perform the maintenance functions.

d. National/NATO Stock Number. This column lists the National/NATO stock number of the specific tool or test equipment.

e. Tool Number. This column lists the manufacturer's part number of the tool followed by the Federal Supply Code for manufacturers (5-digit) in parentheses.

SECTION II MAINTENANCE ALLOCATION CHART FOR

RECEIVING SET, RADIO AN/URR-71

(1) GROUP NUMBER	(2) COMPONENT/ASSEMBLY	(3) MAINTENANCE FUNCTION	(4) MAINTENANCE CATEGORY					(5) TOOLS AND EQUIPMENT
			C	O [1]	F	H [2, 4]	D	
00	RECEIVING SET, RADIO AN/URR-71	Inspect	0.3					
		Test		0.5				
		Service	0.5					
		Replace		0.5				7, 12
		Repair			2.0			1 thru 15
		Overhaul					20.0	1 thru 15
01	RECEIVER, RADIO, R-1518/UR A1	Inspect	0.3					
		Test		0.5				
		Service	0.5					
		Replace		0.5				7, 12
		Repair			2.0			1 thru 15
0101	RADIO ASSEMBLY (A1A1)	Test		0.5				12
		Adjust			0.5			7, 13
		Repair			1.0			1 thru 15
010101	CONTROL PANEL ASSEMBLY (A1A1A1) (Repair of the control panel assembly at direct support maintenance is limited to that which does not require soldering.)	Test			0.5			13
		Repair			1.0			7, 13
		Repair				3.0		7, 13
		Replace				3.0		7, 13
010102	GEAR & TUNER ASSEMBLY (A1A1A2)	Test			0.5			
		Align				1.0		13
		Adjust				0.5		13
		Repair				2.0		13
		Replace				3.0		13
01010201	RF TUNER ASSEMBLY (A1A1A2A1)	Repair				2.0		13
		Replace				3.0		13
010102020I	TUNER SUBASSEMBLY (A1A1A2A1A1) (Repair made on next higher assembly)	Repair				2.0		13
01010201011	MOTHERBOARD CIRCUIT CARD ASSEMBLY (A1A1A2A1A1A1)	Test				1.0		7, 13
		Repair				2.0 L		7, 13, 14
		Replace				3.0		7, 13
01010201012	RF PRESELECTOR CIRCUIT CARD ASSEMBLY (A1A1A2A1A2)	Test				0.5		1 thru 15
		Repair				2.0 L		7, 13, 14
		Replace				0.5		7, 13
01010201013	FIRST RF AMPLIFIER CIRCUIT CARD ASSEMBLY (A1A1A2A1A3)	Test				0.5		1 thru 15
		Repair				2.0 L		7, 13, 14
		Replace				0.5		7, 13
01010201014	SECOND RF AMPLIFIER CIRCUIT CARD ASSEMBLY (A1A1A2A1A4)	Test				0.5		1 thru 15
		Repair				2.0 L		7, 13, 14
		Replace				0.5		7, 13
01010201015	THIRD RF AMPLIFIER CIRCUIT CARD ASSEMBLY (A1A1A2A1A5)	Test				0.5		1 thru 15
		Repair				2.0 L		7, 13, 14
		Replace				0.5		7, 13
01010201016	OSCILLATOR MIXER CIRCUIT CARD ASSEMBLY (A1A1A2A1A6)	Test				0.5		1 thru 15
		Repair				2.0 L		7, 13, 14
		Replace				0.5		7, 13

See footnotes at end of chart.

SECTION II MAINTENANCE ALLOCATION CHART
FOR

RECEIVING SET, RADIO AN/URR-71

(1) GROUP NUMBER	(2) COMPONENT ASSEMBLY	(3) MAINTENANCE FUNCTION	(4) MAINTENANCE CATEGORY					(5) TOOLS AND EQUIPMENT
			C 1	O	F	H 2, 3	D	
010103	I.F. AMPLIFIER ASSEMBLY (A1A1A3)	Test			0.5			1 thru 15
		Repair				2.0		1, 2, 3, 7, 13
		Align				1.0		1, 2, 3, 7,13
01010301	I.F. AMPLIFIER CIRCUIT CARD ASSEMBLY (A1A1A3A1)	Test				0.5		1 thru 15
		Replace				1.0		7, 13, 14
		Repair				2.0 L		1, 2, 3, 7, 14
		Align				1.0		1, 2, 3, 7, 14
010104	DETECTOR ASSEMBLY (A1A1A4)	Test				0.5		1 thru 15
		Repair				2.0		1, 2, 3, 7, 13
		Align				1.0		1, 2, 3, 7, 13
01010401	DETECTOR CIRCUIT CARD ASSEMBLY (A1A1A4A1)	Test				0.5		1 thru 15
		Repair				2.0 L		1, 2, 3, 7, 14
		Replace				1.0		7, 13
		Align				1.0		1, 2, 3, 7, 14
010105	POWER SUPPLY ASSEMBLY (A1A1A5)	Test			0.5			5,6,7,8,13
		Adjust			0.5			5, 6, 7, 8, 13
		Replace			1.0			7, 13
		Repair				2.0		7, 13
01010501	POWER SUPPLY CIRCUIT CARD ASSEMBLY (A1A1A5A1)	Test				0.5		5,6,7,8,13
		Adjust				0.5		5, 6, 7, 8, 13
		Replace				1.0		7, 13
		Repair				2.0 L		7, 13
01010502	REGULATOR CIRCUIT CARD ASSEMBLY (A1A1A5A2)	Test				0.5		5,6,7,8,13
		Adjust				0.5		5, 6, 7, 8, 13
		Replace				0.5		7, 13
		Repair				2.0 L		7, 13
010106	CALIBRATION OSCILLATOR ASSEMBLY (A1A1A6)	Test			0.5			1 thru 15
		Repair				2.0		1, 2, 3, 4, 7, 13
		Align				1.0		1, 2, 3, 4, 7, 13
01010601	CALIBRATION OSCILLATOR CIRCUIT CARD ASSEMBLY (A1A1A6A1)	Test				0.5		1 thru 15
		Repair				2.0 L		1, 2, 3, 4, 7, 13
		Replace				1.0		7, 13
		Align				1.0		1, 2, 3, 4, 7, 13
0102	DUST COVER ASSEMBLY (A1A2)	Inspect	0.2					
		Test			0.5			
		Repair				1.0		13
010201	COVER ASSEMBLY (BATTERY) (A1A2A1)	Inspect	0.2					
		Repair				1.0		7, 13
		Replace	0.5					13
02	ANTENNA AS-2887/UR (A2)	Inspect	0.2					
		Test			0.5			13
		Repair			1.0			13
		Replace		0.5				12
03	FIELD PACK, CANVAS CW-1005/UR (A3)	Inspect	0.2					
		Replace		0.5				

(1) Denotes a combined effort by the operator/crewman and organizational repairman. Initial testing and replacement is performed by the organizational repairman.

(2) Intermediate level repairs are performed by the Direct "F" or General "H" Support, depending on the complexity of the repair.

(3) The Specialized Repair Activity (SRA), identified by "L" next to the repair function, will repair Printed Circuit Cards and Conformally Coated Boards (PCB).

(1) GROUP NUMBER	(2) COMPONENT ASSEMBLY	(3) MAINTENANCE FUNCTION	(4) MAINTENANCE CATEGORY					(5) TOOLS AND EQUIPMENT
			C	D	E	W [1]	O	

TABLE 1. TOOL AND TEST EQUIPMENT REQUIREMENTS
FOR
RECEIVING SET, RADIO AN/URR-71

TOOL OR TEST EQUIPMENT REF CODE	MAINTENANCE CATEGORY	NOMENCLATURE	NATIONAL/NATO STOCK NUMBER	TOOL NUMBER
1	F,H,D	SIGNAL GENERATOR AN/USM-44B	6625-00-539-9685	
2	H,D	SIGNAL GENERATOR (MARCONI TF-1066B/1)		
3	F,H,D	OSCILLOSCOPE AN/USM-281A	6625-00-228-2201	
4	F,H,D	COUNTER, ELECTRONIC, DIGITAL READOUT AN/USM-207A	6625-00-911-6368	
5	F,H,D	DIGITAL VOLTMETER AN/GSM-64	6625-00-870-2264	
6	F,H,D	ELECTRONIC VOLTMETER AN/URM-145	6625-00-973-3986	
7	O,F,H,D	MULTIMETER TS-352B/U	6625-00-553-0142	
8	F,H,D	ELECTRONIC VOLTMETER ME-30E/U	6625-00-643-1670	
9	F,H,D	FET PROBE (TEKTRONIX P6045)		
10	F,H,D	ATTENUATOR 20 db (WARDA 771-20)		
11	H,D	AMPLIFIER AF, RF AM-4825/U	6625-00-982-2977	
12	O	TOOL KIT, ELECTRONIC EQUIPMENT TK-101/G	5180-00-064-5178	
13	F,H,D	TOOL KIT, ELECTRONIC EQUIPMENT TK-105/G	5180-00-610-8177	
14	H,D	REPAIR KIT, PRINTED WIRING BOARD MK-772/U	5999-00-751-7042	
15	F,H,D	MAINTENANCE ITEM SET SMB747494 (80063)		
		IN ADDITION TO THE TOOL AND TEST EQUIPMENT LISTED ABOVE, THE FOLLOWING ACCESSORY ITEMS ARE REQUIRED TO PERFORM TEST AND REPAIR:		
		ADAPTER, CONNECTOR UG-201A/U	5935-00-842-9614	
		ADAPTER, CONNECTOR UG-274B/U (2 ea)	5935-00-683-7892	
		ADAPTER, CONNECTOR UG-349A/U (2 ea)	5935-00-204-8392	
		ADAPTER, CONNECTOR UG-491B/U	5935-00-681-5013	
		ADAPTER, CONNECTOR UG-914/U	5935-00-280-1454	
		ADAPTER, CONNECTOR (SELECTRO SC51-073-0000) (2 ea)		
		ADAPTER, CONNECTOR (AMPHENOL 79675)	5935-00-701-2215	
		ADAPTER, CONNECTOR (SMC747202)		
		CAPACITOR, FIXED, GLASS: 10PF, ± 5% (CY10C100J)	5910-00-840-0148	
		CAPACITOR, FIXED, GLASS: 330PF, ± 5% (CY15C331J)	5910-00-581-2580	
		CAPACITOR, FIXED, 0.1uf, ± 5%		
		CONNECTOR, PLUG, ELECTRICAL UG-88G/U (4 ea)	5935-00-835-0508	
		CONNECTOR, PLUG, ELECTRICAL UG-1094/U (4 ea)	5935-00-665-5718	
		INDUCTOR, 1 mh, ± 5% (2 ea)		
		RESISTOR, FIXED, COMPOSITION 51Ω, ± 5%, 1/4w (RC07GF510J)	5905-00-106-1249	
		RESISTOR, FIXED, COMPOSITION 620Ω, ± 5%, 1/4w (RC07GF621J) (2 ea)	5905-00-801-6998	
		RESISTOR, FIXED, COMPOSITION 3K, ± 5%, 1/4w (RC07GF302J)	5905-00-131-9729	
		RESISTOR, FIXED, COMPOSITION 51K, ± 5%, 1/4w (RCR07G513JS)	5905-00-136-3890	

TABLE 1. TOOL AND TEST EQUIPMENT REQUIREMENTS
FOR

TOOL OR TEST EQUIP. REF. CODE	MAINTENANCE CATEGORY	NOMENCLATURE	NATIONAL/NAVY STOCK NUMBER	TOOL NUMBER

INDEX

	Paragraph	Page
Adjustments:		
Initial	3-4	3-3
Radio assembly (A1A1)	6-14	6-13
Administrative storage	1-4	1-1
Agc characteristic test	6-13*m*	6-13
Alignment:		
Radio, GS	7-13*c*	7-19
Local oscillator	7-13*c*(1)	7-19
RF amplifiers	7-13*c*(2)	7-20
AM:		
Reception	3-5*c*	3-3
Whip sensitivity test	6-13*l*	6-12
Sensitivity test	6-13*c*	6-7
Ancillary items, maintenance	4-14	4-4
Antenna repair	4-13*c*	4-4
Antijamming procedures	3-9	3-4
Audio output test	6-13*j*	6-11
Battery installation	2-5*a*	2-3
Battery compartment (theory)	5-12*a*	5-5
Block diagram analysis	5-2	5-1
Calibration	1-7	1-1
Calibration oscillator:		
Disassembly	7-6*i*	7-5
Functioning	5-2*c*	5-1
Reassembly	7-9*a*	7-15
Testing, DS	6-21	6-22
Testing, GS	7-23	7-30
Checking unpacked equipment	2-4	2-2
Circuit card repairs	7-8*b*	7-5
Cleaning	4-6	4-1
Common names	1-9	1-1
Control panel assembly:		
Disassembly	7-6*b*	7-4
Reassembly	7-9*h*	7-17
Testing, DS	6-16	6-15
Testing, GS	7-12	7-19
Controls:		
Damage from improper settings	3-1	3-1
Operator/crew, description	3-2	3-1
CW sensitivity test	6-13*d*	6-8
Description:		
Antenna AS-2887/UR	1-6*c*	1-1
Field Pack CW-1005/UR	1-6*d*	1-1
Receiver R-1518/UR	1-6*b*	1-1
Receiving Set, Radio AN/URR-71	1-6*a*	1-1
Destruction of Army electronics materiel	1-3	1-1
Detector assembly:		
Disassembly	7-6*g*	7-4
Functioning	5-2*e*	5-1
Reassembly	7-9*c*	7-15
Testing, DS	6-19	6-20
Testing, GS	7-21	7-25
Dial light test	6-13*b*	6-7
Dial readout error test	6-13*h*	6-9
Diode output test	6-13*k*	6-11
Disassembly:		
Receiver, DS	6-6	6-4
Receiver, GS	7-6	7-3
1A1(radio receiver)	6-6*a*	6-4
1A1A1 (radio assembly)	6-6*b*	6-5
Disassembly – Continued		
1A1A1A1 (control panel)	7-6*b*	7-4
1A1A1A2 (gear and tuner assembly)	7-6*c*	7-4
A1A1A2A1 (RF tuner assembly)	7-6*d*	7-4
A1A1A2A1A1 (tuner subassembly)	7-6*e*	7-4
A1A1A3 (if. amplifier)	7-6*f*	7-4
A1A1A4 (detector assembly)	7-6*g*	7-4
A1A1A5 (power supply)	7-6*h*	7-5
A1A1A6 (calibration oscillator)	7-6*i*	7-5
A1A2 (dust cover)	6-6*a*(2)	6-5
Discriminator output test	6-13*i*	6-10
Dust cover:		
Disassembly	6-6*a*(2)	6-5
Functioning	5-11	5-5
Reassembly	6-9*d*	6-6
Testing	6-22	6-22
Electrical tests, preliminary test setup	6-12	6-6
Emergency conditions, operation under	3-7	3-3
Fm sensitivity test	6-13*e*	6-8
Forms and records	1-2	1-1
Frequency calibrator accuracy test	6-13*f*	6-8
Frequency modulation reception	3-5*d*	3-3
Functioning:		
AM receiver subsystem	5-7	5-3
Calibration oscillator	5-2*c*	5-1
Detector assembly	5-2*e*	5-1
Dust cover	5-11	5-5
FM receiver subsystem	5-9	5-4
Gear and tuner assembly	5-3	5-2
IF assembly	5-2*d*	5-1
Of equipment, general	5-1	5-1
Oscillator mixer	5-6	5-3
Power supply	5-2*f*	5-2
Preselector	5-4	5-2
RF amplifiers	5-5	5-3
Fuse replacement	4-13*b*	4-4
Gear and tuner assembly:		
Alignment	7-13*c*	7-19
Disassembly	7-6*c*	7-4
Functioning	5-3	5-2
Reassembly	7-9*f*	7-16
Testing, DS	6-17	6-17
Testing, GS	7-13	7-19
IF amplifier:		
Adjustment	6-14	6-13
Disassembly	7-6*f*	7-4
Function	5-2*d*	5-1
Installation	6-9*a*(5)	6-6
Reassembly	7-9*d*	7-16
Removal	6-6*b*(1)	6-5
Testing, DS	6-18	6-18
Testing, GS	7-20	7-25
Initial adjustments	3-4	3-3
Injection Level test	6-13*g*	6-9
Inspection, DS	6-13*g*	6-9
Inspection, GS	7-7	7-5
Installation:		
Battery	2-5*a*	2-3
Fixed configuration	2-5*c*	2-4
Manpack configuration	2-5*b*	2-3
Vehicular configuration	2-6	2-6

INDEX

Subject	Paragraph	Page
Adjustments		
Initial	3-4	3-3
Radio assembly A1A1A1	6-11	6-13
Audio monitor output	1-4	1-1
Automatic direction finder	6-11m	6-13
Alignment		
Basic, DS	3-10b	3-19
Linear oscillator	7-12c(1)	7-19
RF amplifier	7-12c(2)	7-20
B,S		
Description	3-5a	3-3
Beep sensitivity test	6-12l	6-15
Sensitivity test	6-12e	6-7
Antenna tuner maintenance	4-14	4-4
Antenna types	4-13b	4-4
Antenna transmitting procedures	3-9	3-4
Audio output test	6-12j	6-15
Battery installation	2-9a	2-3
Battery temperature tolerance	5-10a	5-6
Block diagram analysis	5-6	5-2
Calibration	1-7	1-2
Calibration procedures		
Disassembly	7-6a	7-3
Functional	3-3b	3-1
Reassembly	7-6b	7-3
Testing, DS	6-11	6-13
Testing, OS	7-12	7-19
Changing operational equipment	2-4	2-2
Circuit card repairs	7-8a	7-8
Clarifier	4-6	4-1
Common name	1-6	1-2
Control panel assembly		
Disassembly	7-6a	7-4
Reassembly	7-6b	7-17
Testing, DS	6-11b	6-13
Testing, OS	7-12	7-19
Controls		
Damage from improper setting	3-1	3-1
Description, destruction	3-2	3-1
DC accessory cord	6-12q	6-8
Description		
Antenna AS-2267/URR	1-8c	1-3
Field Desk CW-1004/URR	1-8d	1-3
Receiver R-1318/URR	1-8b	1-3
Receiving Set, Radio AN/URR-71	1-8a	1-3
Destruction of Army electronics		
General	1-3	1-1
Detector assembly		
Disassembly	7-6g	7-4
Alignment	3-5b	3-3
Reassembly	7-6h	7-4
Testing, DS	6-11i	6-13
Testing, OS	7-12g	7-19
Dial light test	6-12a	6-7
Dial readout error test	6-12b	6-7
Diode output test	6-12d	6-7
Disassembly		
Receiver, DS	6-6	6-1
Receiver, OS	7-6	7-3
A1A1A1, radio assembly	6-6b	6-3
A1A1A2, tuner assembly	6-6c	6-3
A1A1A3, detector assembly	6-6d	6-3
A1A1A4, power supply	6-6e	6-3
A1A1A5, RF amplifier	6-6f	6-3
Display, operation	3-7	3-3
Emergency conditions, operation under	3-8	3-3
Electrical tests, preliminary test setup	6-12	6-6
Fm sensitivity test	6-12e	6-7
Forms and records	1-2	1-1
Frequency calibrator accuracy test	6-12f	6-8
Frequency modulation reception	3-5d	3-3
Functional description		
AM receiver subsystem	5-7	5-3
Calibration oscillator	5-7e	5-4
Detector assembly	5-7a	5-4
Dial cover	5-11	5-6
FM receiver subsystem	5-8	5-4
Front end tuner assembly	5-9	5-5
IF assembly	5-9d	5-5
Of equipment, general	5-1	5-1
Oscillator mixer	5-8	5-5
Power supply	5-6f	5-3
Preselector	5-6	5-3
RF amplifiers	5-5	5-3
Fuse replacement	4-12a	4-4
Gear and tuner assembly		
Alignment	7-12d	7-19
Disassembly	7-6c	7-4
Functions	5-4	5-2
Reassembly	7-6i	7-18
Testing, DS	6-11j	6-13
Testing, OS	7-12	7-19
IF amplifier		
Alignment	6-11	6-13
Disassembly	7-6f	7-4
Function	5-9d	5-5
Installation	6-6b(1)	6-4
Reassembly	7-6k	7-19
Removal	6-6b(1)	6-4
Testing, DS	6-11h	6-13
Testing, OS	7-12f	7-19
Initial adjustments	3-4	3-3
Injection Level test	6-12g	6-8
Inspection, DS	6-3	6-1
Inspection, OS	7-3	7-3
Installation		
Battery	2-9a	2-3
Fixed configuration	2-5a	2-2
Manpack configuration	2-7a	2-3
Vehicular configuration	2-6	2-3

	Paragraph	Page
Items comprising an operable equipment	1-8	1-1
Jamming:		
Antijamming procedures	3-9	3-4
Recognition and identification of	3-8	3-3
Maintenance:		
Ancillary items	4-14	4-4
Duties, operator and organizational	4-2	4-1
Forms and records	1-2.1	1-1
Receiver fuse replacement	4-13*b*	4-4
Manpack or fixed configuration:		
Installation	2-5	2-3
Movement, preparation for	3-10	3-4
Operating procedures:		
General	3-5	3-3
AM reception	3-5*c*	3-3
CW reception	3-5*b*	3-3
Equipment starting	3-5*a*	3-3
Equipment stopping	3-6	3-3
FM reception	3-5*d*	3-3
Under emergency conditions	3-7	3-3
Under normal conditions	3-5	3-3
Operator/crew PMCS	4-5	4-1
Organizational PMCS	4-11	4-4
Oscillator mixer:		
Functioning	5-6	5-3
Testing	7-19	7-24
Panel meter test	6-13*a*	6-6
Physical tests and inspection	6-11	6-6
Power supply:		
Adjustment	6-20*e*	6-22
Disassembly	7-6*h*	7-5
Functioning	5-2*f*	5-2
Installation	6-9*a*(2)	6-5
Reassembly	7-9*b*	7-15
Removal	6-6*b*(4)	6-5
Testing, DS	6-20	6-21
Testing, GS	7-22	7-28
Preliminary starting procedures	3-3	3-2
Preparation for movement:		
Fixed configuration	3-10*b*	3-4
Manpack configuration	3-10*a*	3-4
Vehicular configuration	3-11	3-5
Preselector:		
Functioning	5-4	5-2
Testing	7-15	7-21
Preventive maintenance:		
Operator/crew	4-4	4-1
Organizational	4-11	4-4
Purpose and use	1-5	1-1
Radio assembly:		
Adjustments	6-14	6-13
Disassembly, DS	6-6*b*	6-5
Disassembly, GS	7-6*a*	7-4
Reassembly, DS	6-9*a*	6-5
Reassembly, GS	7-9*i*	7-18
Testing, DS	6-15	6-14
Testing, GS	7-11	7-19
Reassembly:		
Receiver, DS	6-9	6-5
Receiver, GS	7-9	7-15
A1A1 (radio assembly)	7-9*i*	7-18
A1A1A1 (control panel)	7-9*h*	7-17
A1A1A2 (gear and tuner assembly)	7-9*f*	7-16
A1A1A2A1 (RF tuner)	7-9*g*	7-17
A1A1A2A1A1 (tuner subassembly)	7-9*c*	7-15
A1A1A3 (IF amplifier)	7-9*d*	7-16
Reassembly—Continued		
A1A1A4 (detector assembly)	7-9*c*	7-15
A1A1A5 (power supply)	7-9*b*	7-15
A1A1A6 (calibration oscillator)	7-9*a*	7-15
A1A2 (dust cover)	6-9*b*	6-6
Receiver parts removal	4-13	4-4
Receiver R-1518/UR:		
Disassembly	6-6*a*	6-4
Reassembly	6-9*c*	6-6
Testing, DS	6-13	6-6
Reed switch replacement	7-8*c*	7-5
Repainting and refinishing	4-7	4-1
Repair and replacement:		
DS	6-8	6-5
GS	7-8	7-5
RF amplifiers:		
Functioning	5-5	5-3
First testing	7-16	7-22
Second testing	7-17	7-23
Third testing	7-18	7-23
RFI filter functioning	5-12*d*	5-6
RF motherboard:		
Installation	7-9*e*	7-16
Removal	7-6*e*	7-4
Testing	7-14	7-21
RF tuner assembly:		
Disassembly	7-6*d*	7-4
Reassembly	7-9*g*	7-17
Shelter requirements	2-2	2-1
Siting	2-1	2-1
Testing:		
A1 (receiver) DS	6-13	6-6
A1A1 (radio assembly) DS	6-13	6-6
A1A1 (radio assembly GS	7-11	7-19
A1A1A1(control panel) DS	6-16	6-15
A1A1A1 (control panel) GS	7-12	7-19
A1A1A2 (gear and tuner) DS	6-17	6-17
A1A1A2 (gear and tuner) GS	7-13	7-19
A1A1A2A1A1A1 (RF motherboard) GS	7-14	7-21
A1A1A2A1A2 (preselector) GS	7-15	7-21
A1A1A2A1A3 (first RF amplifier) GS	7-16	7-22
A1A1A2A1A4 (second RF amplifier) GS	7-17	7-23
A1A1A2A1A5 (third RF amplifier) GS	7-18	7-23
A1A1A2A1A6 (oscillator mixer) GS	7-19	7-24
A1A1A3 (IF amplifier) DS	6-18	6-18
A1A1A3 (IF amplifier) GS	7-20	7-25
A1A1A4 (detector assembly) DS	6-19	6-20
A1A1A4 (detector assembly) GS	7-21	7-25
A1A1A5 (power sipply) DS	6-20	6-21
A1A1A5 (power supply) GS	7-22	7-28
A1A1A6 (calibration oscillator) DS	6-21	6-22
A1A1A6 (calibration oscillator) GS	7-23	7-30
A1A2 (dust cover) DS	6-22	6-22
A1A3 (antenna) DS	6-23	6-23
Tools and test equipment:		
DS	6-2	6-1
GS	7-2	7-1
Organizational	4-3	4-1
Troubleshooting:		
DS	6-4	6-1
GS	7-4	7-1
Operators	4-10	4-2
Organizational	4-10	4-2
Tuner subassembly:		
Disassembly	7-6*c*	7-4
Reassembly	7-9*e*	7-16
Unpacking	2-3	2-1
Vehicular configuration	2-6	2-6

U.S. GOVERNMENT PRINTING OFFICE: 1983—705-743/A77

By Order of the Secretary of the Army:

FRED C. WEYAND
General, United States Army
Chief of Staff

Official:
PAUL T. SMITH
Major General, United States Army
The Adjutant General

Distribution:
Active Army:
USASA (2)
COE (2)
TSG (1)
USAARENBD (1)
DARCOM (1)
TRADOC (2)
OS Maj Comd (4)
LOGCOMDS (3)
MICOM (2)
TECOM (2)
USACC (4)
MDW (1)
Armies (2)
Corps (2)
HISA (Ft Monmouth) (33)
Svc Colleges (1)
USASESS (5)
USAADS (2)
USAFAS (2)
USAARMS (2)
USAIS (2)
USAES (2)
USAICS (3)
MAAG (1)
USARMIS (1)
Instls (2) except:
Ft Gordon (10)
Ft Huachuca (10)
Ft Carson (5)
Ft Richardson (ECOM Ofc) (2)
LBAD (14)
SAAD (30)
TOAD (14)
SHAD (3)
Ft Gillem (10)
Sig FLDMS (1)
USAERDAA (1)
USAERDAW (1)
Units org under fol TOE:
(1 copy each unit)
11-500 (AA-AC)
29-134
29-136

NG: None
USAR: None
For explanation of abbreviations used, see AR 310-50.

☆ U.S. GOVERNMENT PRINTING OFFICE : 1982 O - 381-447 (1765)

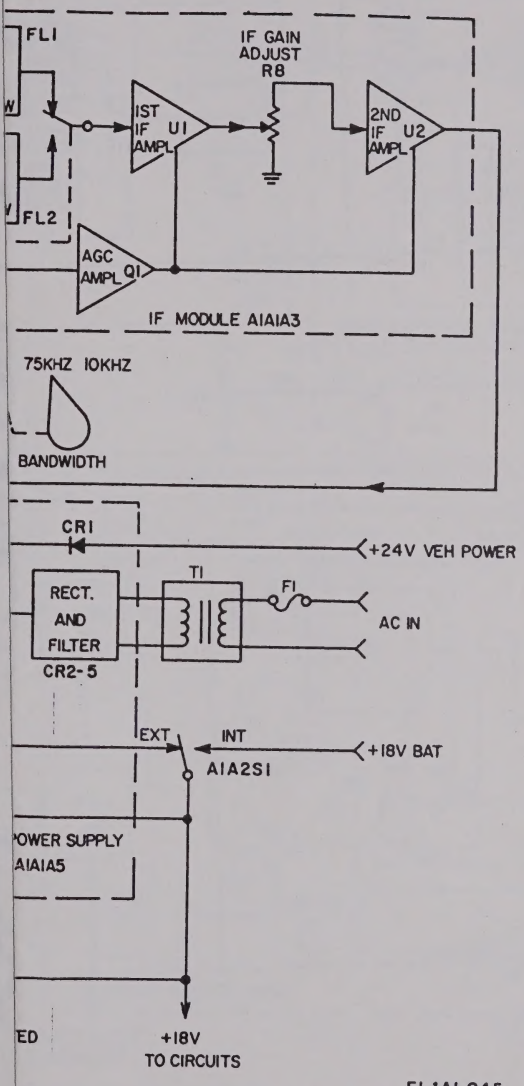
FL1
FL2
IF GAIN ADJUST R8
1ST IF U1 AMPL
2ND IF U2 AMPL
AGC AMPL Q1
IF MODULE A1A1A3
75KHZ 10KHZ
BANDWIDTH
CR1
+24V VEH POWER
T1
F1
RECT. AND FILTER CR2-5
AC IN
EXT
INT
+18V BAT
A1A2S1
POWER SUPPLY A1A1A5
+18V TO CIRCUITS
EL1AL045

AN/URR-71.

By Order of the Secretary of the Army:

FRED C. WEYAND
General, United States Army
Chief of Staff

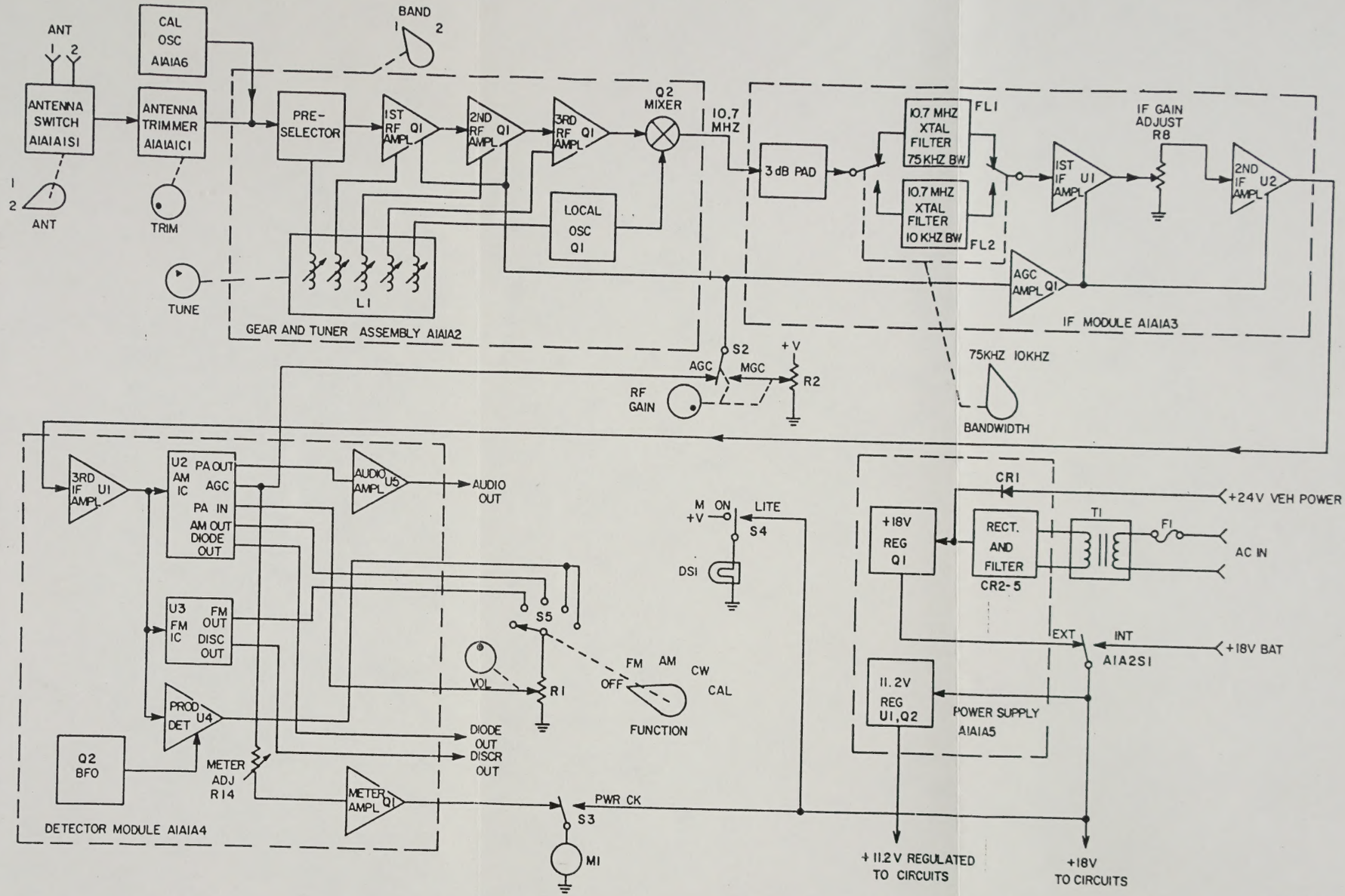

Figure FO-1. Block diagram, AN/URR-71.

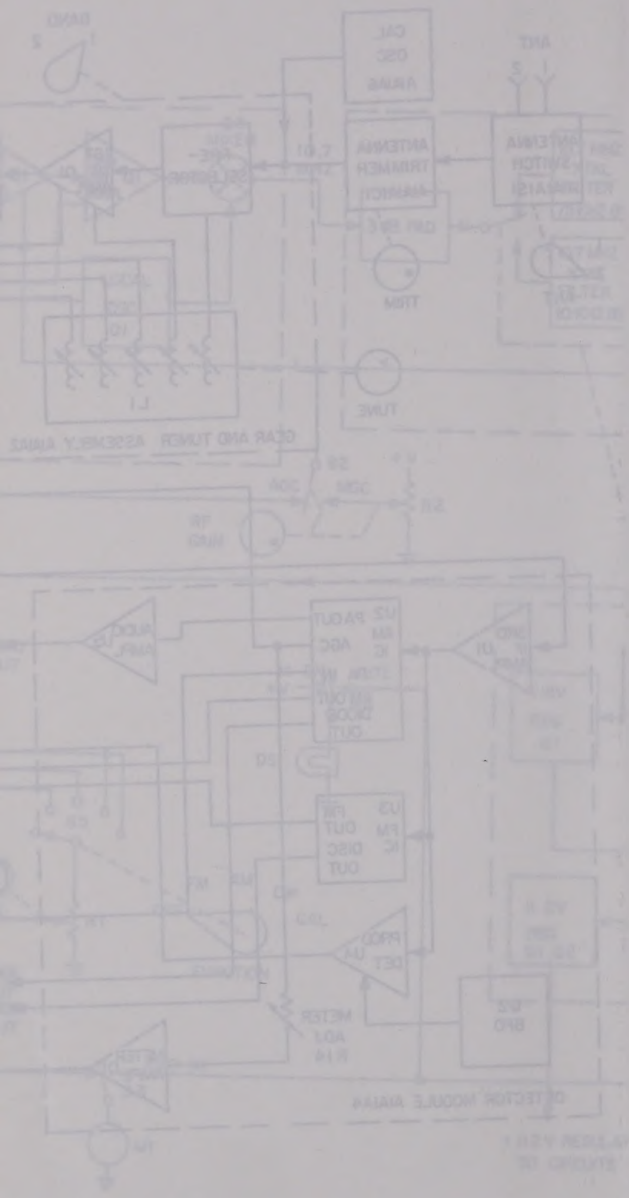

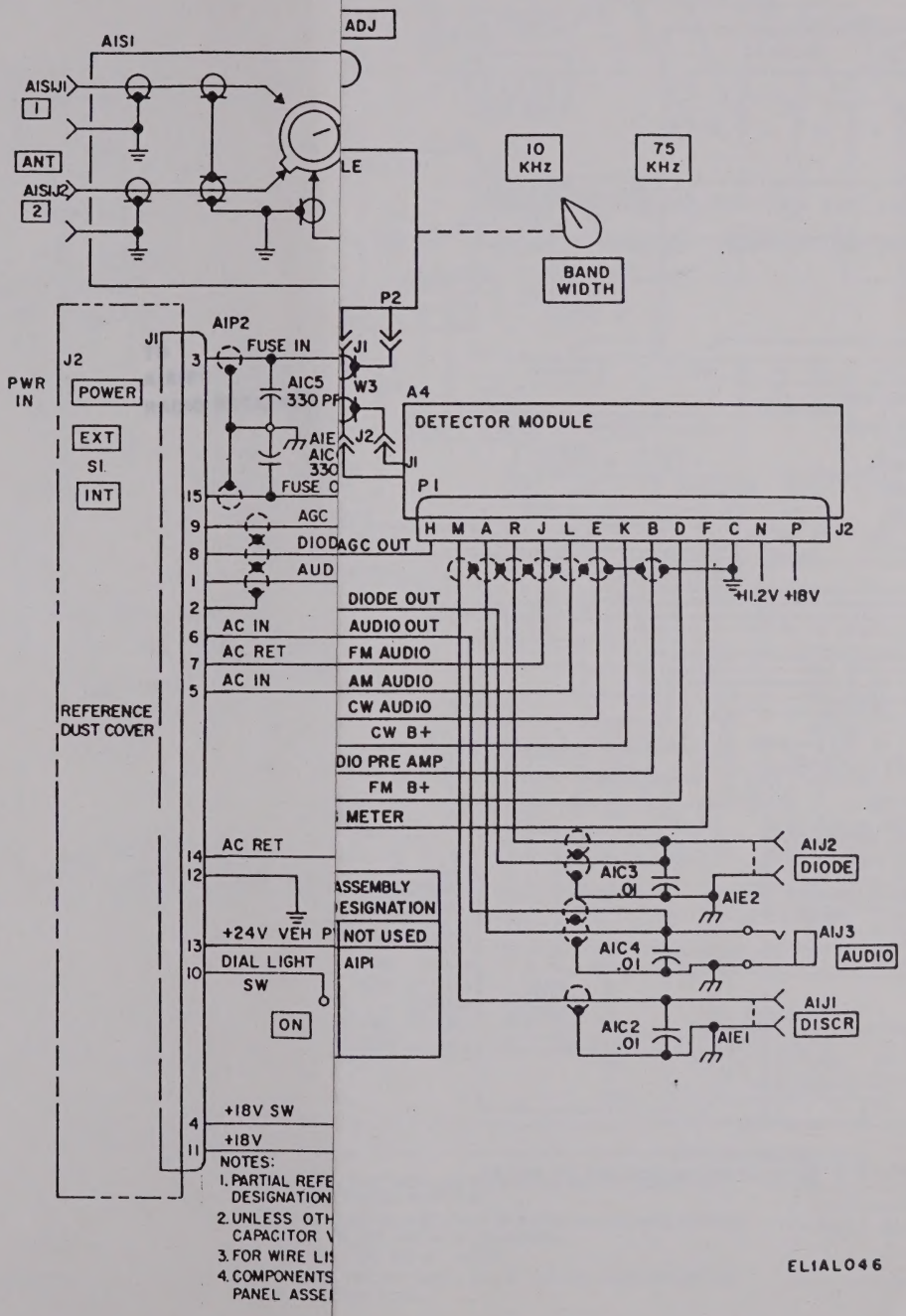

tic diagram, AN/URR-71.

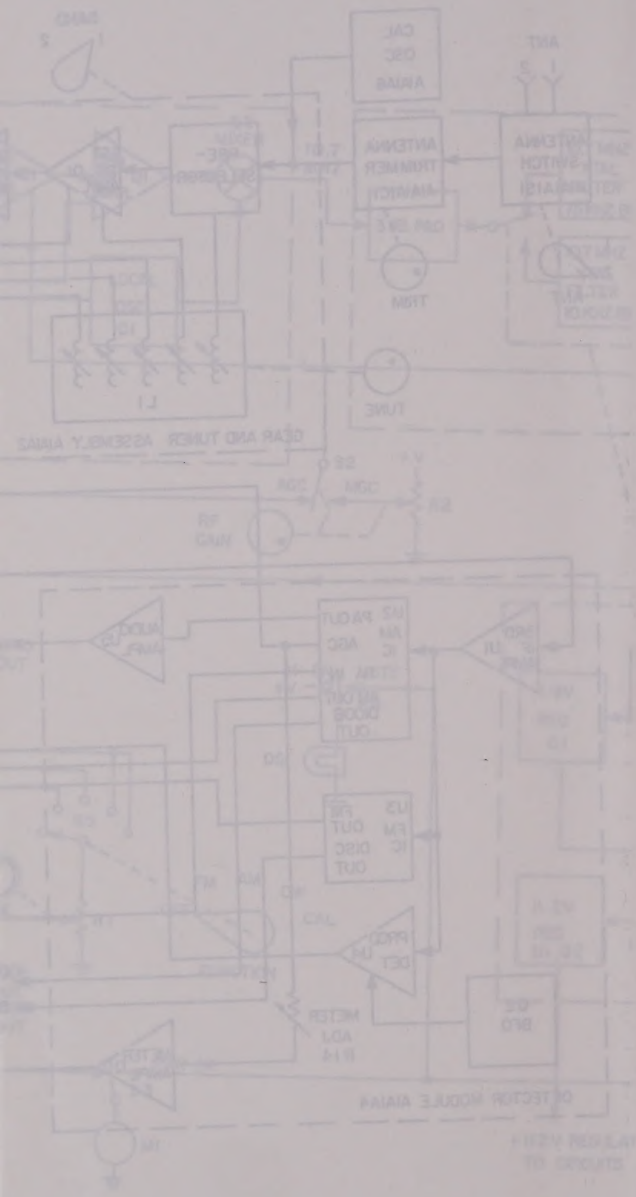

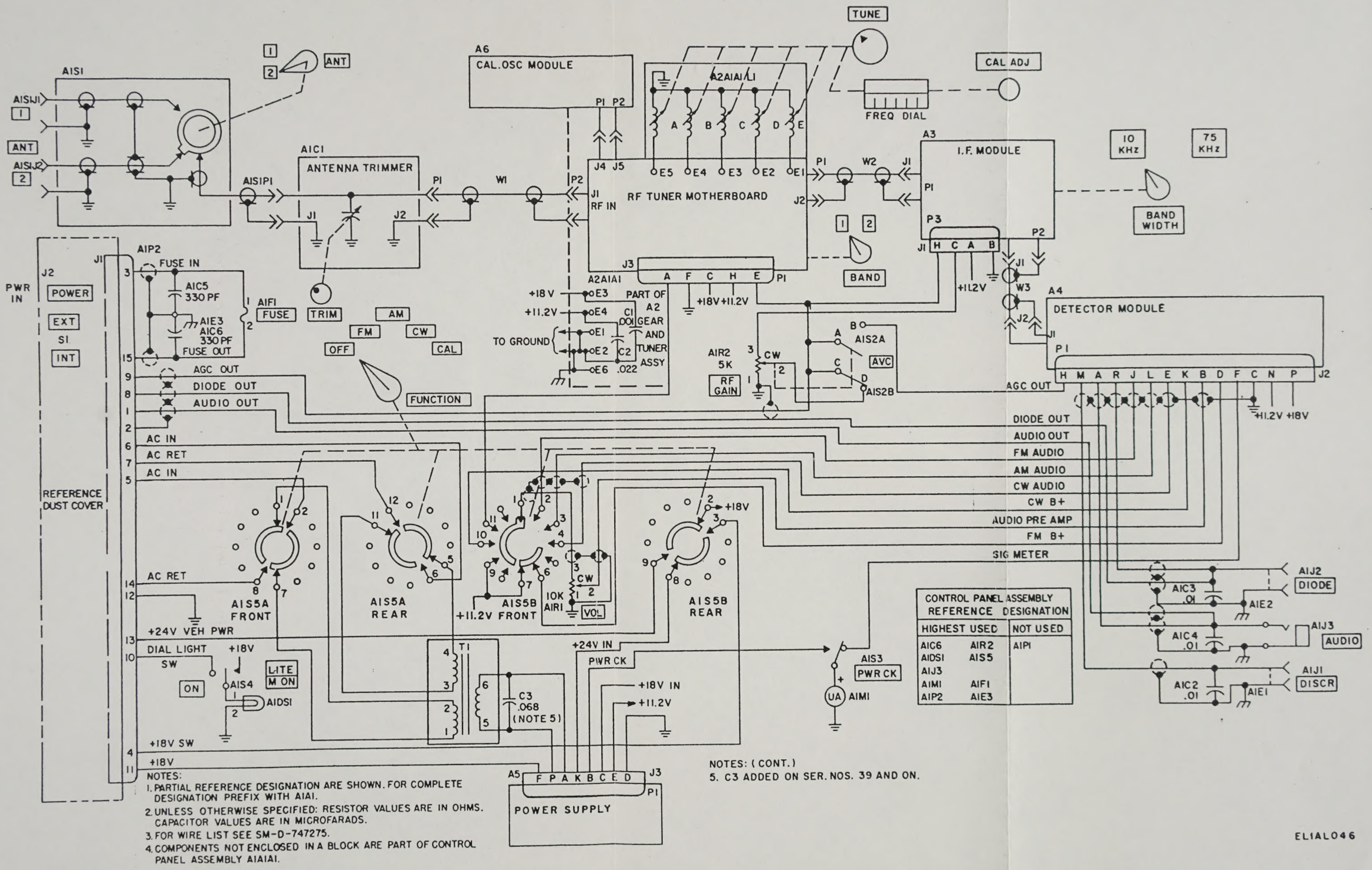

CONTROL PANEL ASSEMBLY REFERENCE DESIGNATION		
HIGHEST USED		NOT USED
A1C6	A1R2	A1P1
A1DS1	A1S5	
A1J3		
A1M1	A1F1	
A1P2	A1E3	

NOTES:
1. PARTIAL REFERENCE DESIGNATION ARE SHOWN. FOR COMPLETE DESIGNATION PREFIX WITH A1A1.
2. UNLESS OTHERWISE SPECIFIED: RESISTOR VALUES ARE IN OHMS. CAPACITOR VALUES ARE IN MICROFARADS.
3. FOR WIRE LIST SEE SM-D-747275.
4. COMPONENTS NOT ENCLOSED IN A BLOCK ARE PART OF CONTROL PANEL ASSEMBLY A1A1A1.

NOTES: (CONT.)
5. C3 ADDED ON SER. NOS. 39 AND ON.

EL1AL046

Figure FO-2. Schematic diagram, AN/URR-71.

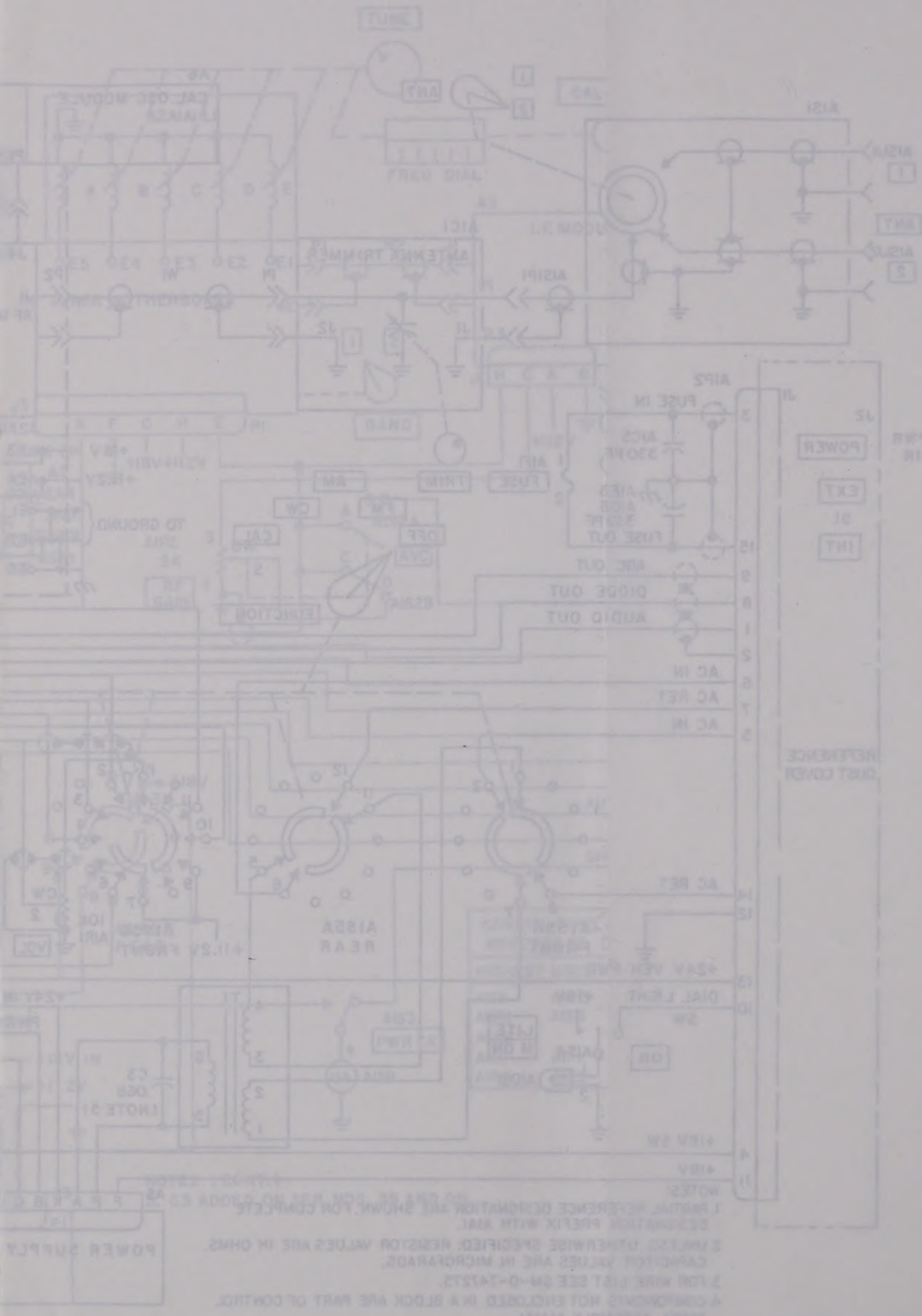

TO
A1A1P2
RADIO RECEIVER

NCE DESIGNATION	
ISED	NOT USED
CR1	

RNAL POWER IS APPLIED, THE
CONNECTIONS ARE PROVIDED
LICABLE MK-1517/UR CABLES.

ERATION:

N C TO H AND SHORT PINS A AND B TO PIN K.
) VAC (HOT) TO PIN L AND 110 VAC (NEUTRAL) TO
) GROUND TO PIN F.

ERATION:

N C TO B AND SHORT PIN A TO K.
OVAC (HOT) TO PIN L AND 220 VAC (NEUTRAL)
AND GROUND TO PIN F.

HICULAR OPERATION:

IN K TO E. APPLY +24VDC TO PIN L AND THE 24VDC
TO PIN F.

ERENCE DESIGNATIONS ARE SHOWN. FOR COMPLETE
PREFIX WITH A1A2.

EL1AL047

gram, dust cover.

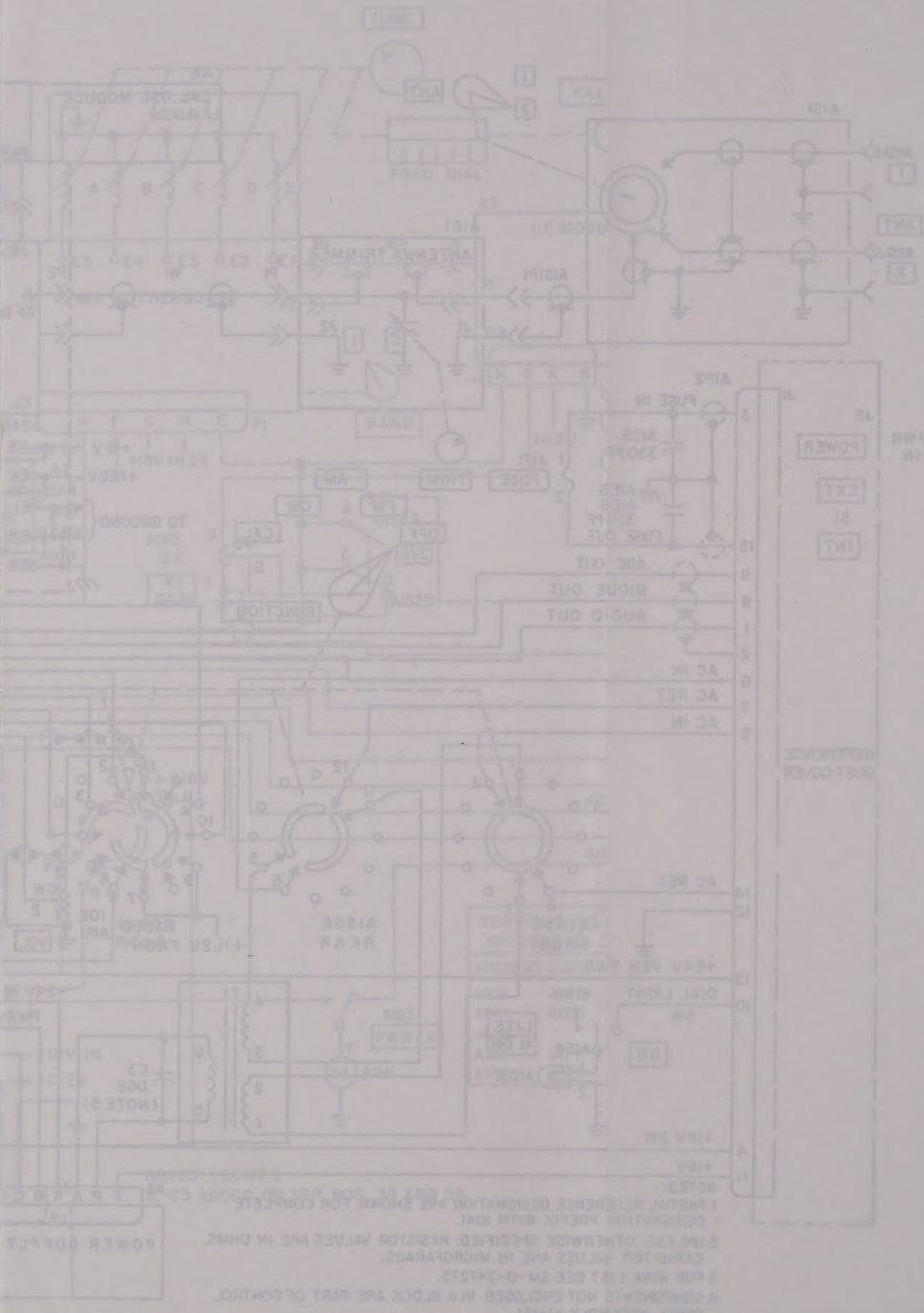

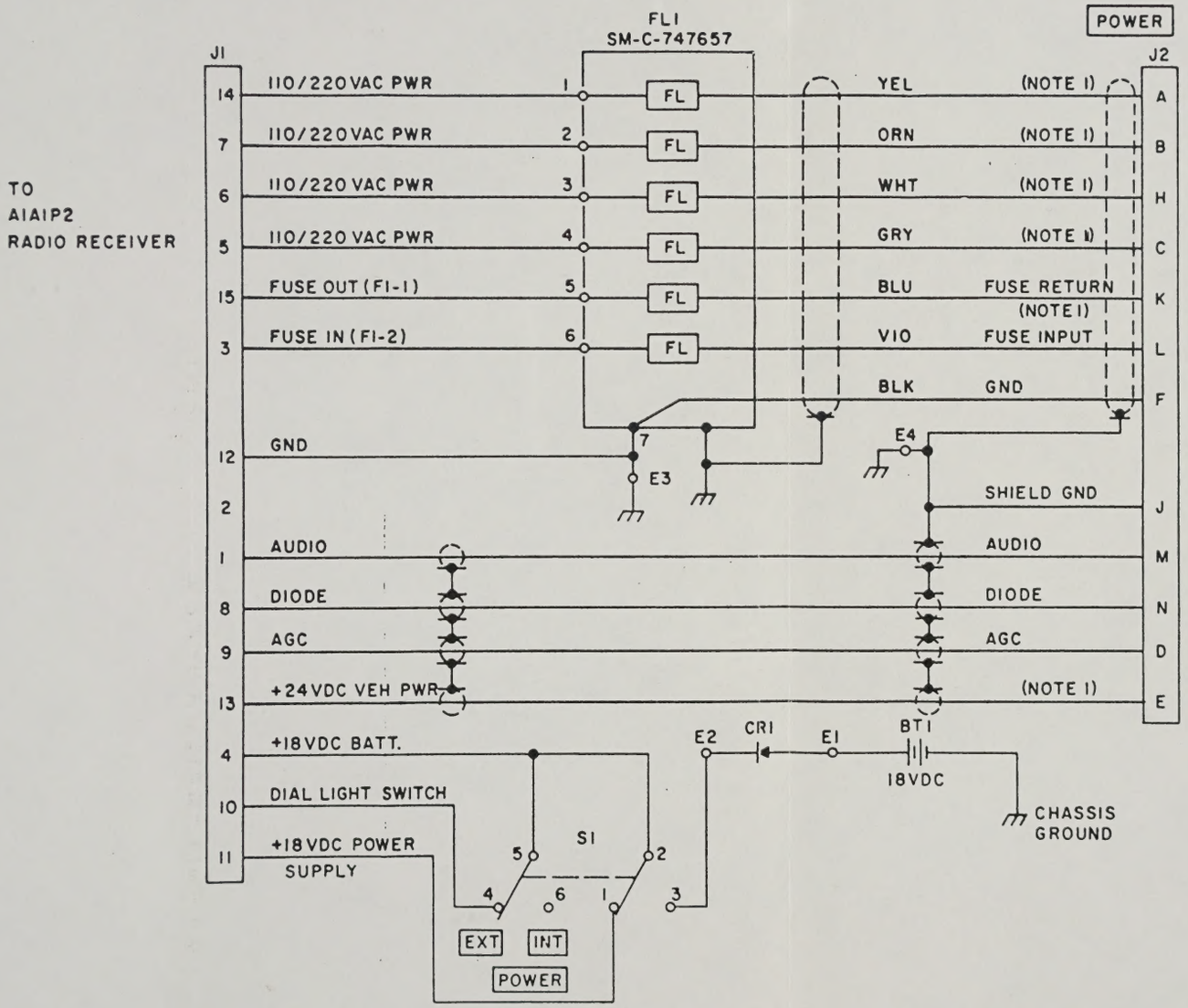

REFERENCE DESIGNATION	
HIGHEST USED	NOT USED
FL1 CR1 E4 S1 BT1 J2	

NOTES:

1. WHEN EXTERNAL POWER IS APPLIED, THE FOLLOWING CONNECTIONS ARE PROVIDED BY THE APPLICABLE MK-1517/UR CABLES.

   110 VAC OPERATION:

   SHORT PIN C TO H AND SHORT PINS A AND B TO PIN K. APPLY 110 VAC (HOT) TO PIN L AND 110 VAC (NEUTRAL) TO PIN C AND GROUND TO PIN F.

   220 VAC OPERATION:

   SHORT PIN C TO B AND SHORT PIN A TO K. APPLY 220 VAC (HOT) TO PIN L AND 220 VAC (NEUTRAL) TO PIN H AND GROUND TO PIN F.

   24 VDC VEHICULAR OPERATION:

   SHORT PIN K TO E. APPLY +24 VDC TO PIN L AND THE 24 VDC RETURN TO PIN F.

2. PARTIAL REFERENCE DESIGNATIONS ARE SHOWN. FOR COMPLETE DESIGNATION PREFIX WITH A1A2.

EL1AL047

Figure FO-3. Schematic diagram, dust cover.

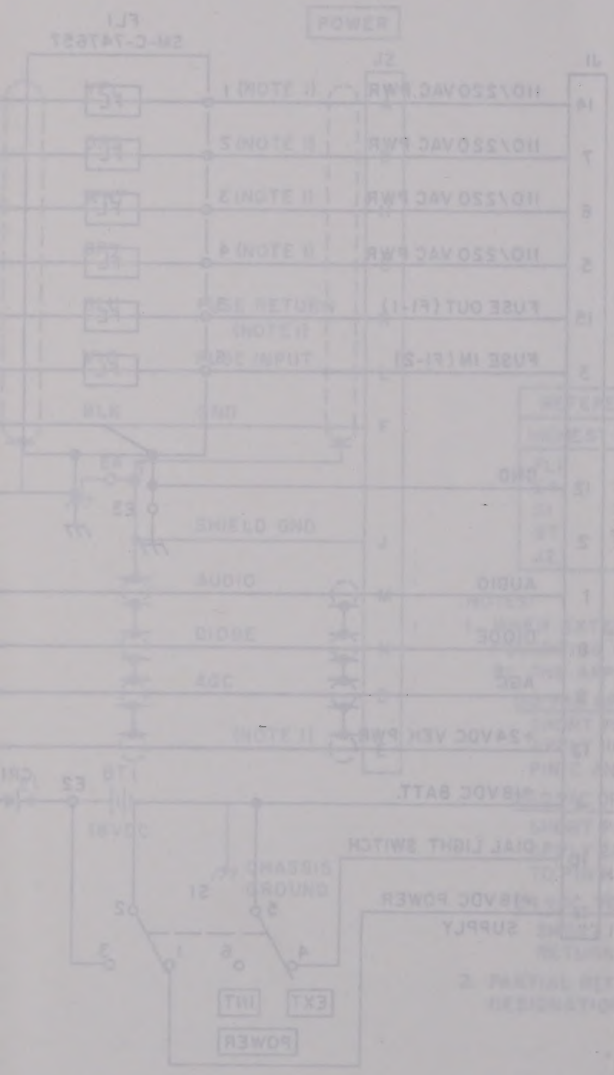
POWER
INT
EXT
POWER

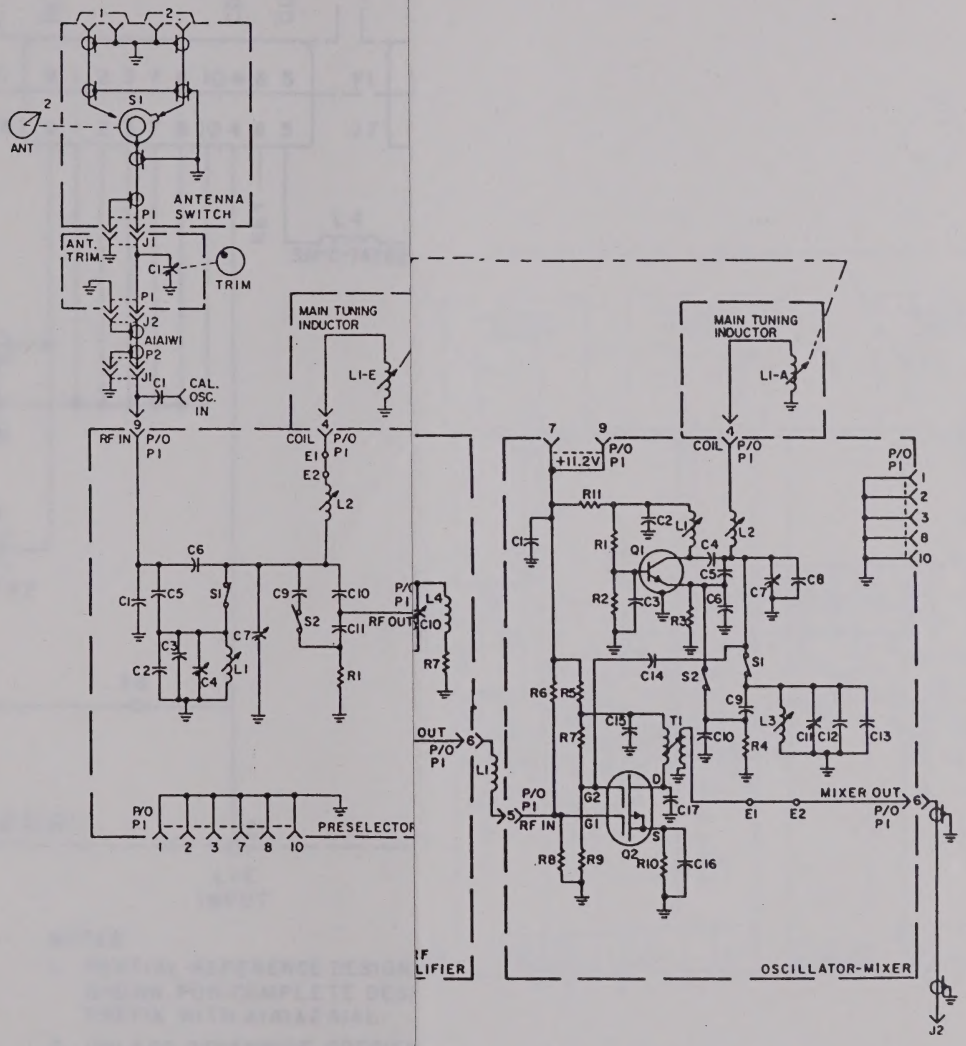

ic diagram, RF tuner.

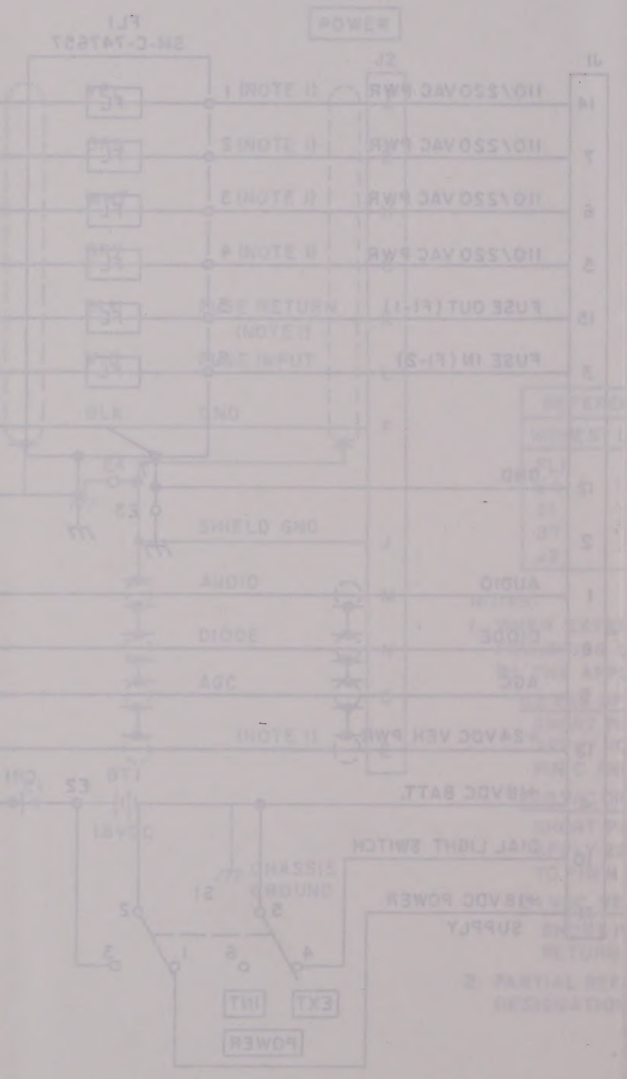

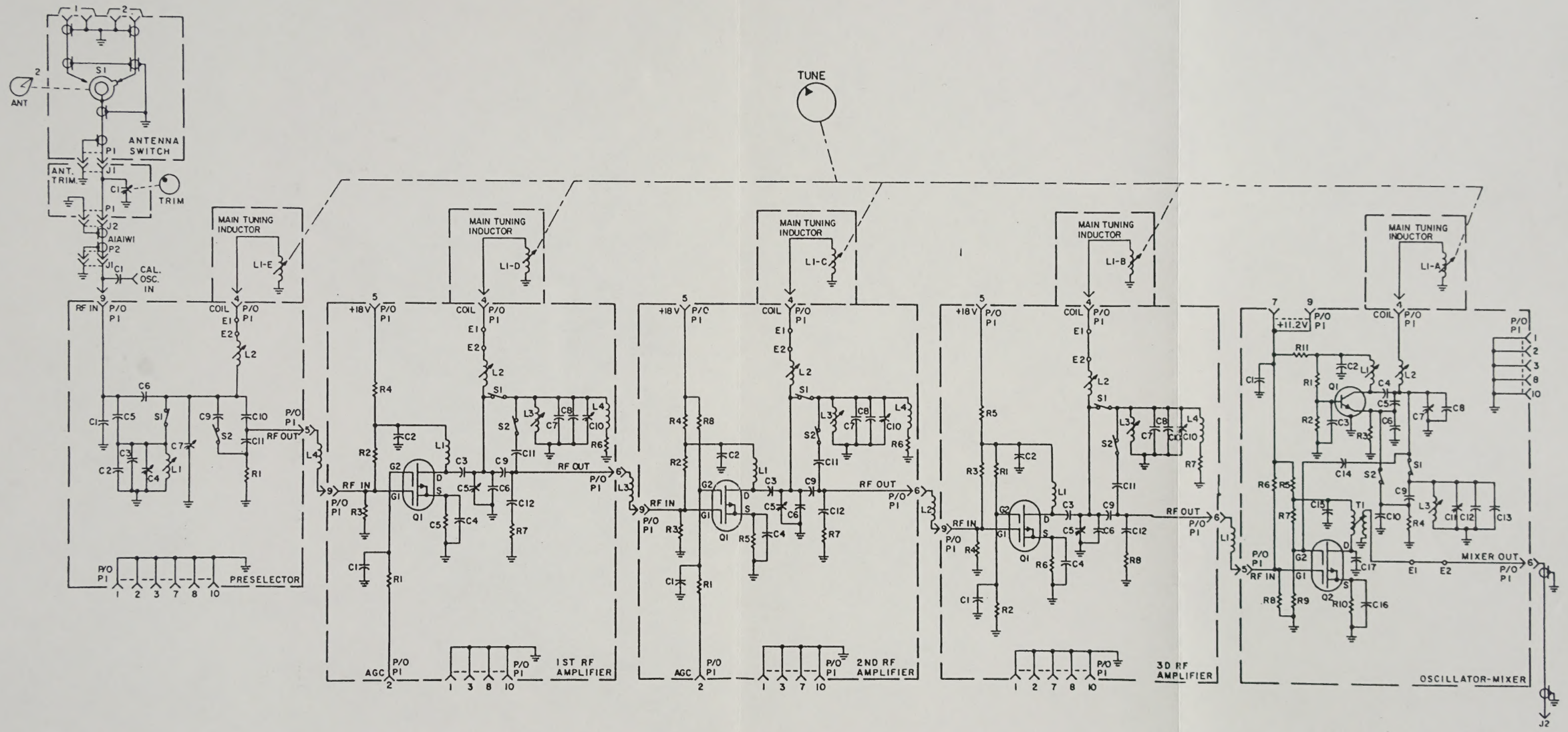

Figure FO-4. Simplified schematic diagram, RF tuner.

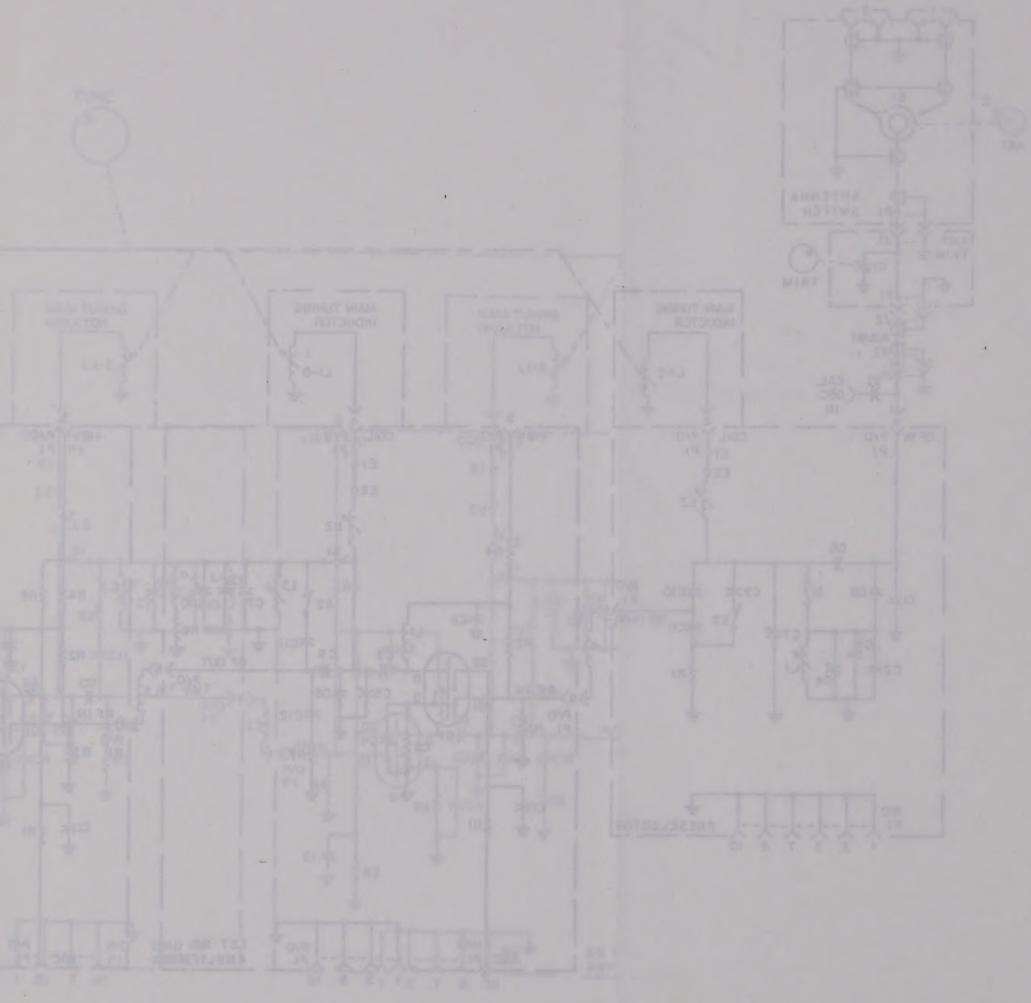

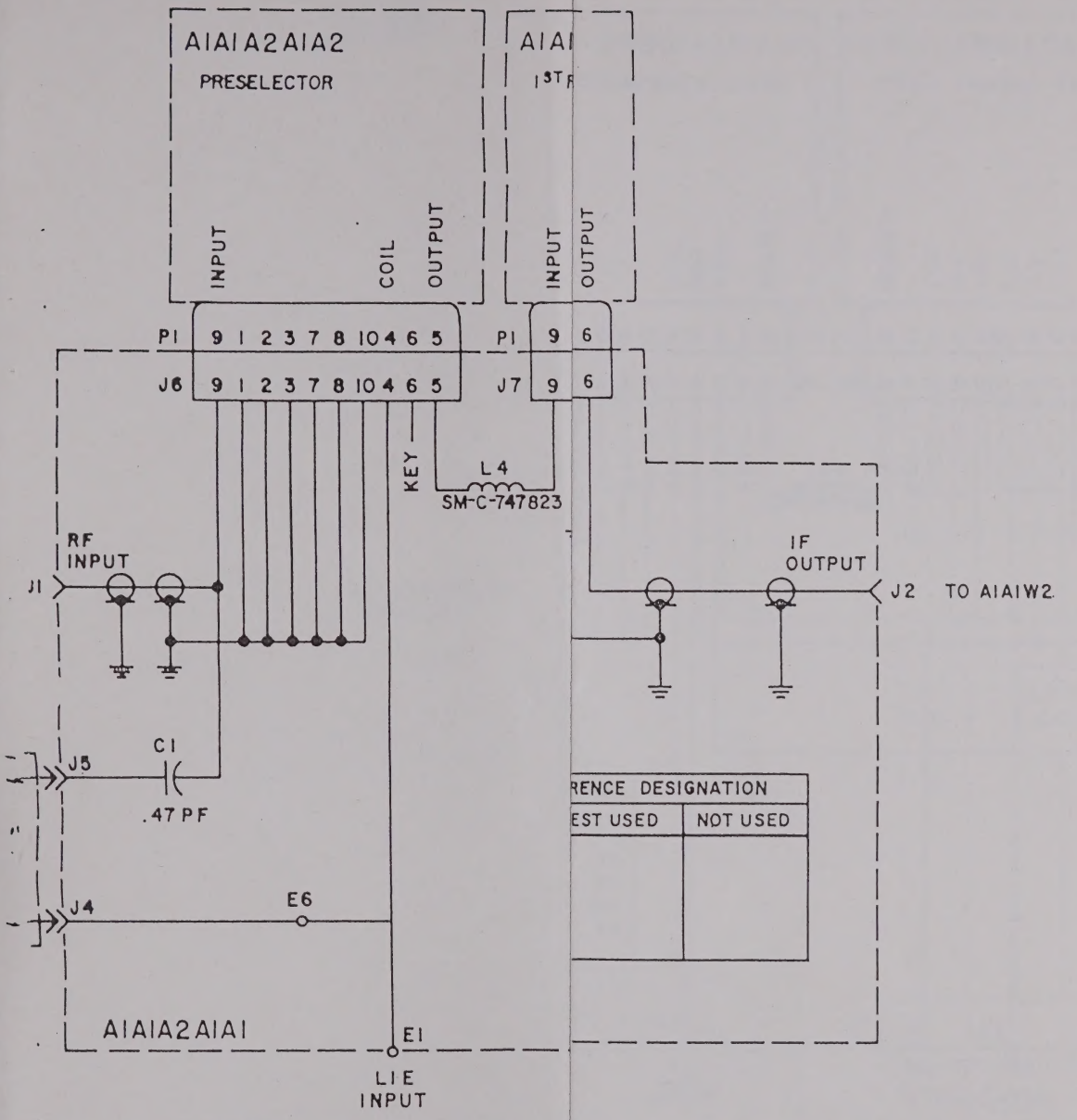

NOTES:

1. PARTIAL REFERENCE DESIGNA
   SHOWN. FOR COMPLETE DESIG
   PREFIX WITH A1A1A2A1A1.
2. UNLESS OTHERWISE SPECIFIE
   CAPACITOR VALUES ARE IN MI
   INDUCTOR VALUES ARE IN MIC

EL1AL049,1

Figure F0-5. Schematic diagram, motherboard.

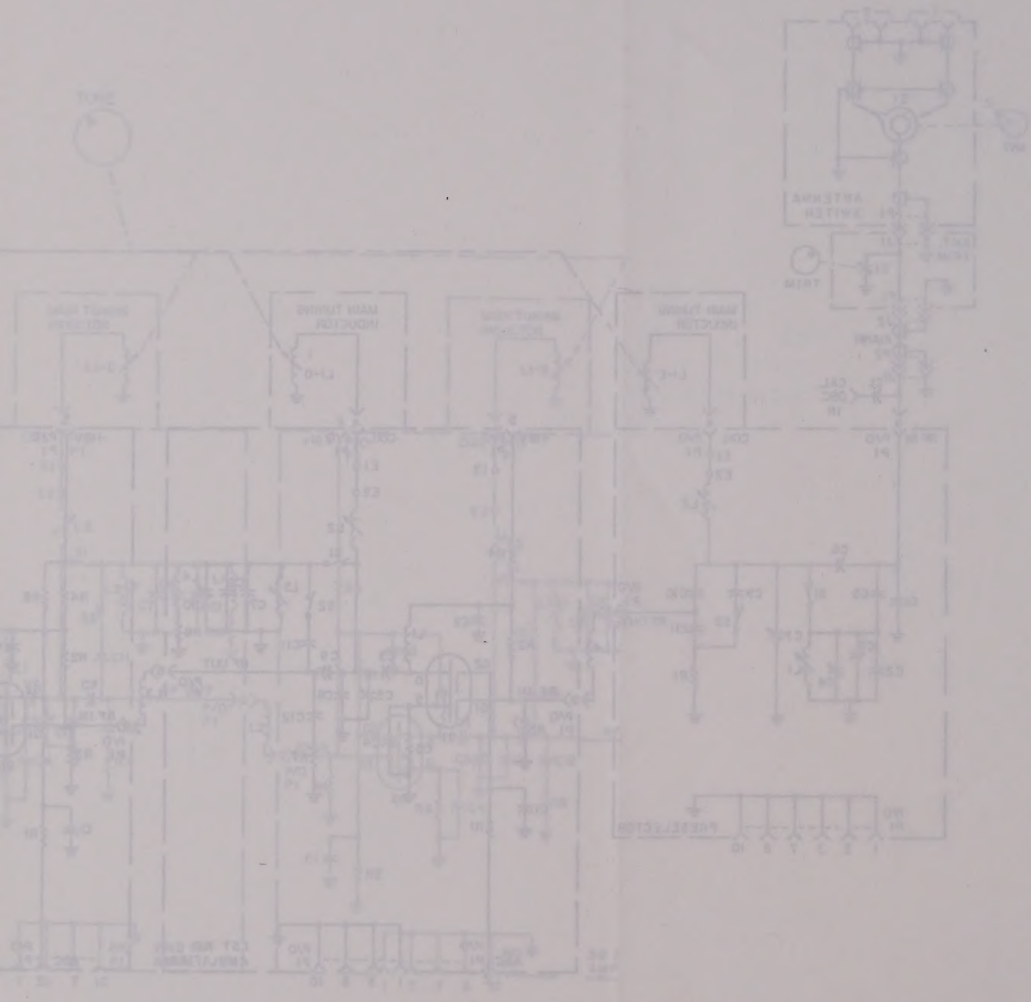

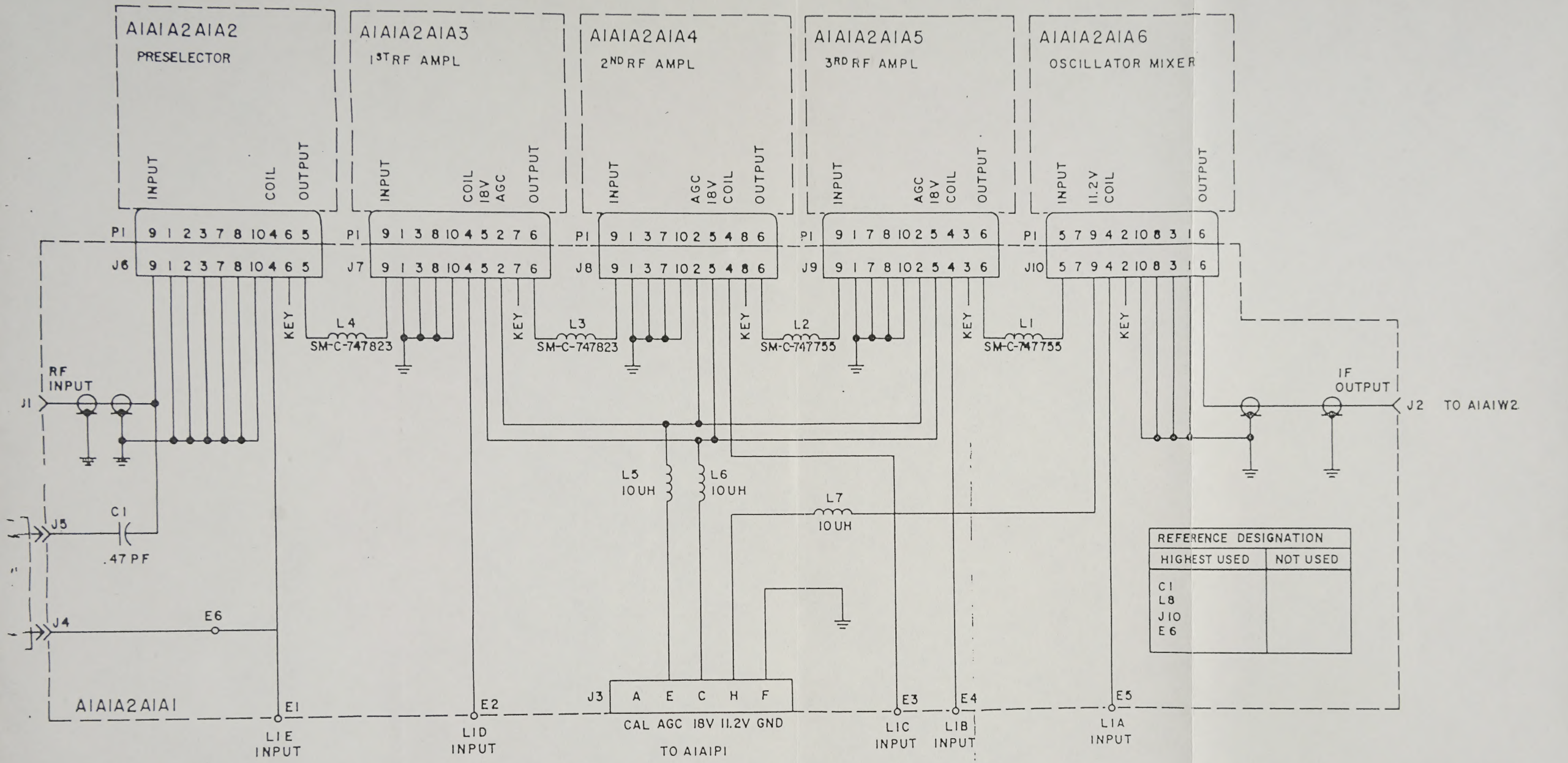

REFERENCE DESIGNATION	
HIGHEST USED	NOT USED
C1 L8 J10 E6	

NOTES:

1. PARTIAL REFERENCE DESIGNATIONS ARE SHOWN. FOR COMPLETE DESIGNATION PREFIX WITH A1A1A2A1A1.
2. UNLESS OTHERWISE SPECIFIED: CAPACITOR VALUES ARE IN MICROFARADS. INDUCTOR VALUES ARE IN MICROHENRIES.

EL1AL049,1

Figure F0-5. Schematic diagram, motherboard.

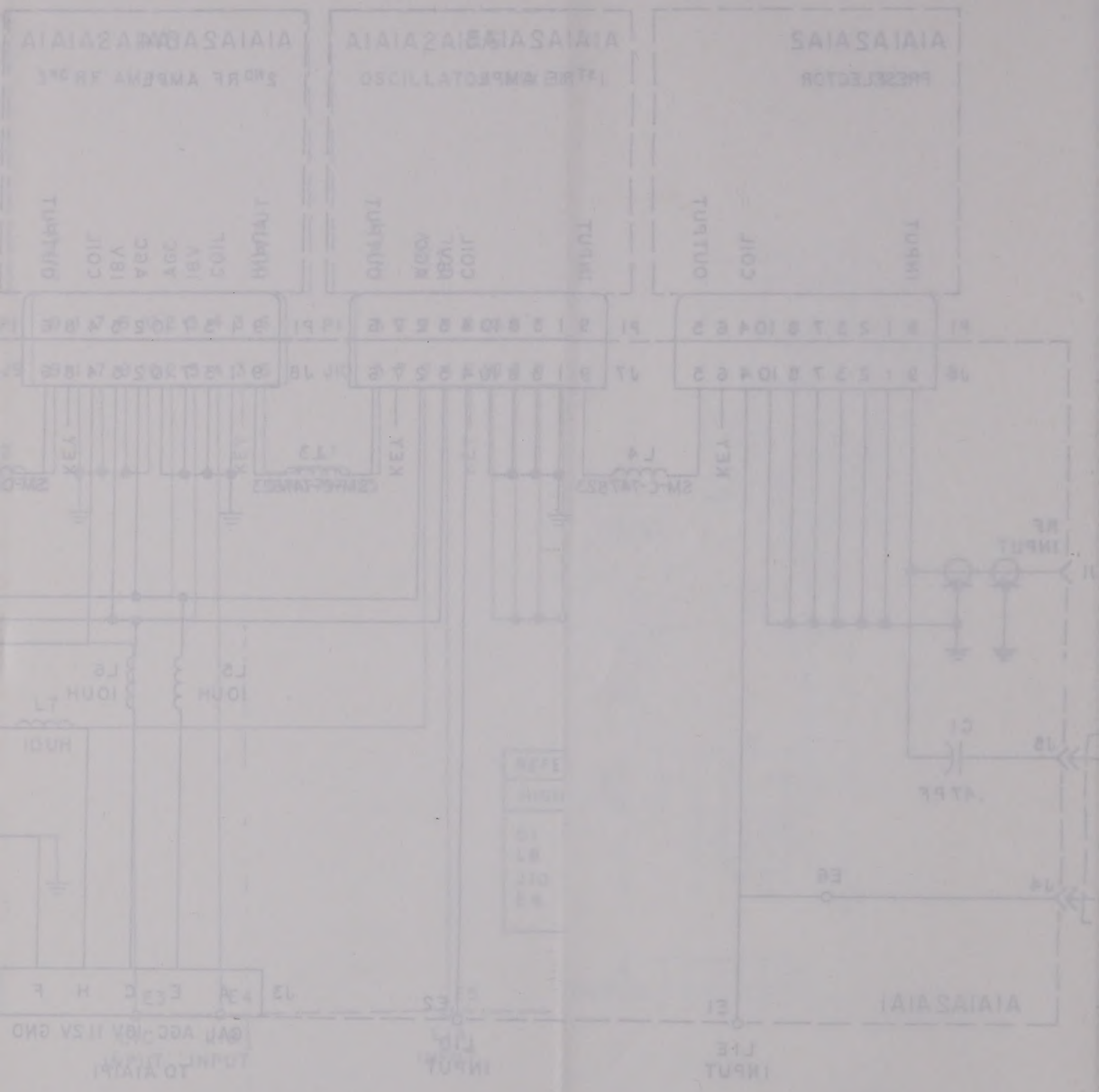

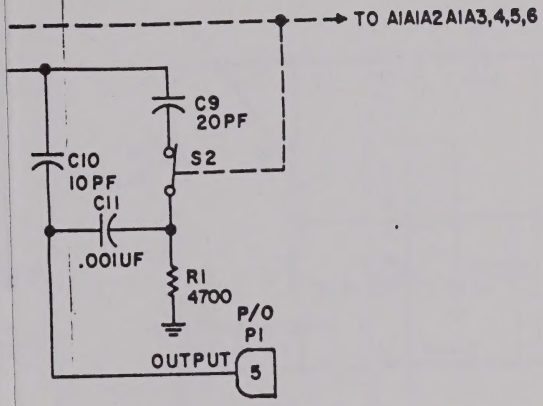

ERENCE DESIGNATION	
EST USED	NOT USED
E2	C8

S:
TIAL REFERENCE DESIGNATIONS ARE
WN. FOR COMPLETE DESIGNATION
FIX WITH A1A1A2A1A2.

ESS OTHERWISE SPECIFIED:
ISTOR VALUES ARE IN OHMS, 1/4W ±5%.

EL1AL050

diagram, RF preselector.

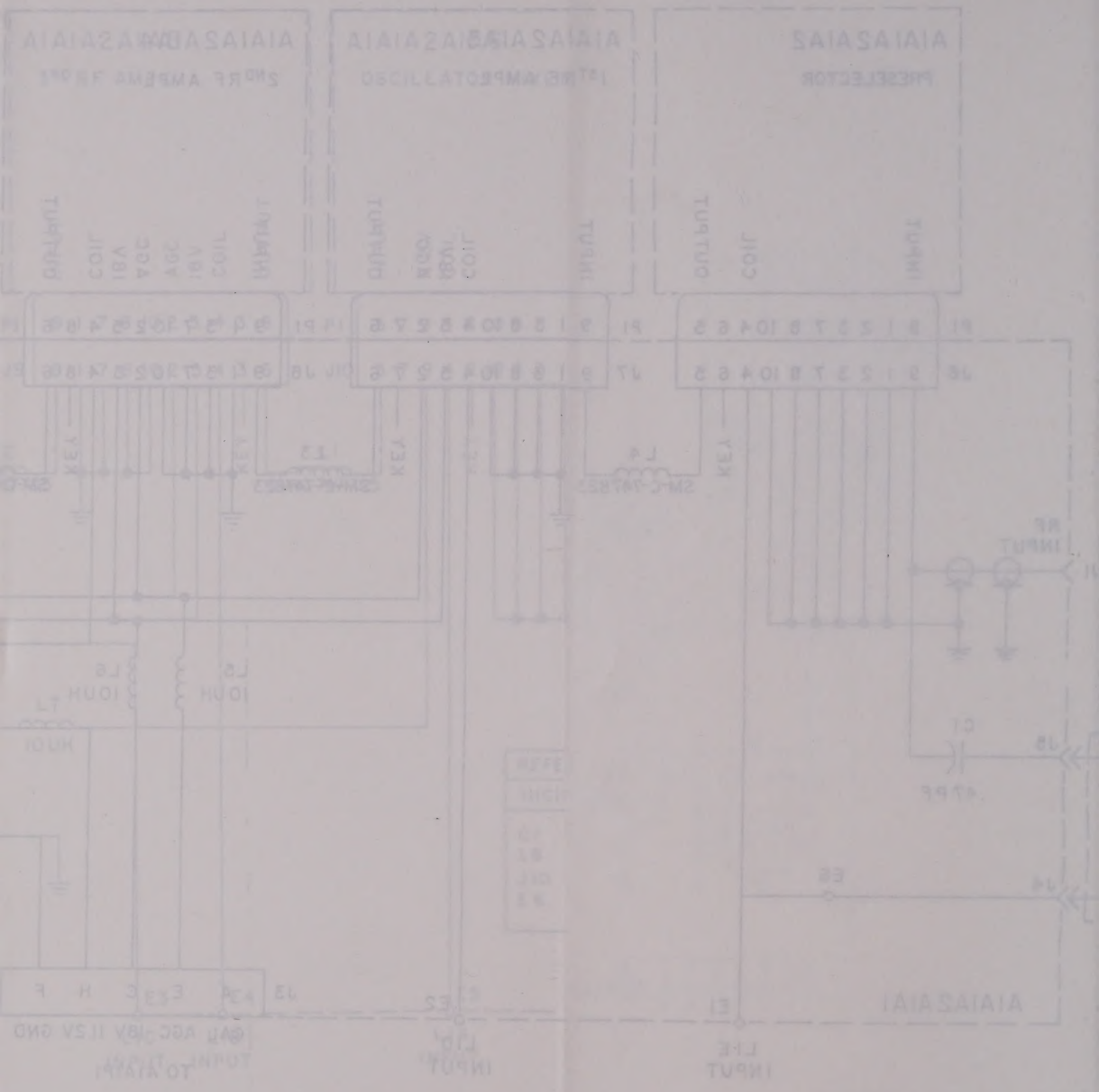

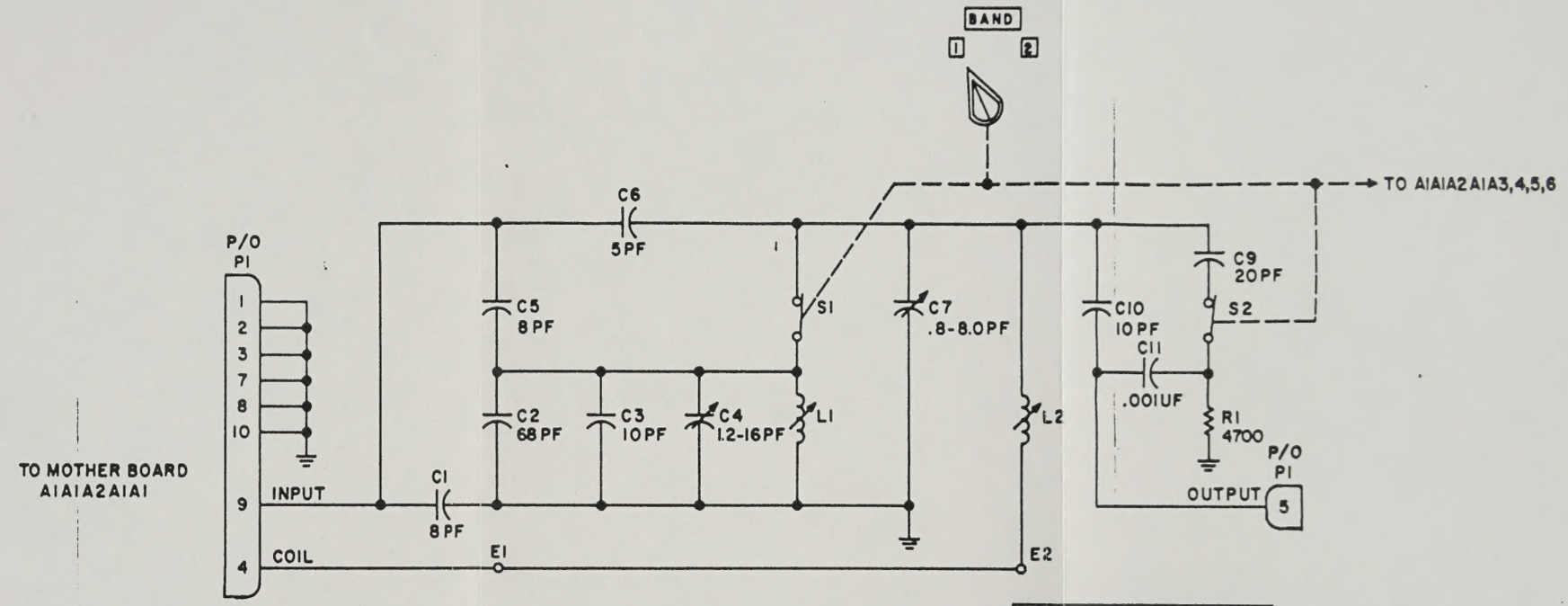

REFERENCE DESIGNATION		
HIGHEST USED		NOT USED
C11 L2 S2 R1 P1	E2	C8

NOTES:
1. PARTIAL REFERENCE DESIGNATIONS ARE SHOWN. FOR COMPLETE DESIGNATION PREFIX WITH A1A1A2A1A2.
2. UNLESS OTHERWISE SPECIFIED: RESISTOR VALUES ARE IN OHMS, 1/4W ±5%.

EL1AL050

Figure FO-6. Schematic diagram, RF preselector.

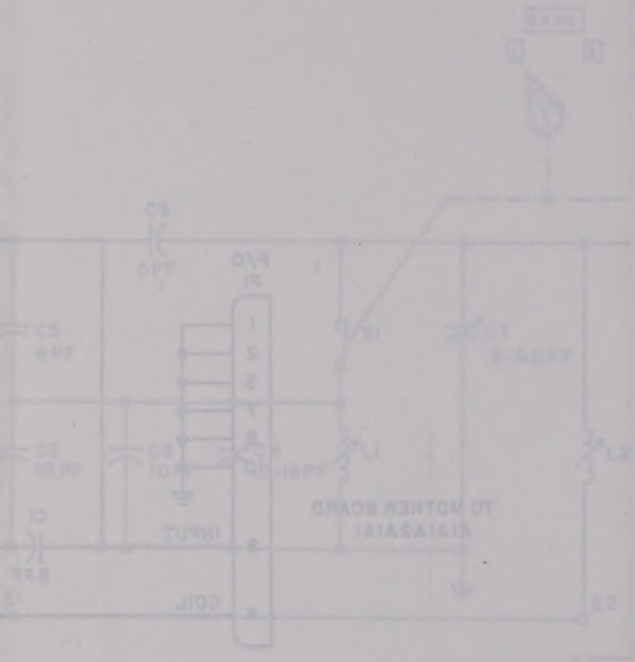

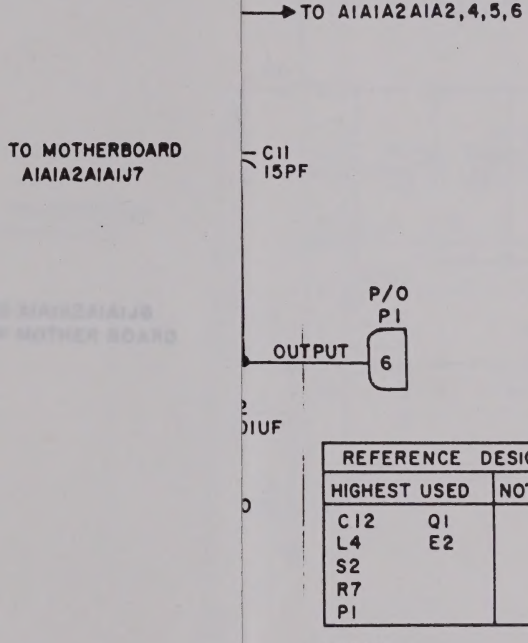

REFERENCE DESIGNATION	
HIGHEST USED	NOT USED
C12 Q1 L4 E2 S2 R7 P1	

NOTES:
1. PARTIAL REFERENCE DESIGNATIONS ARE SHOWN. FOR COMPLETE DESIGNATION PREFIX WITH A1A1A2A1A3.
2. UNLESS OTHERWISE SPECIFIED: RESISTOR VALUES ARE IN OHMS, 1/4W ±5%.

EL1AL051

agram, first RF amplifier.

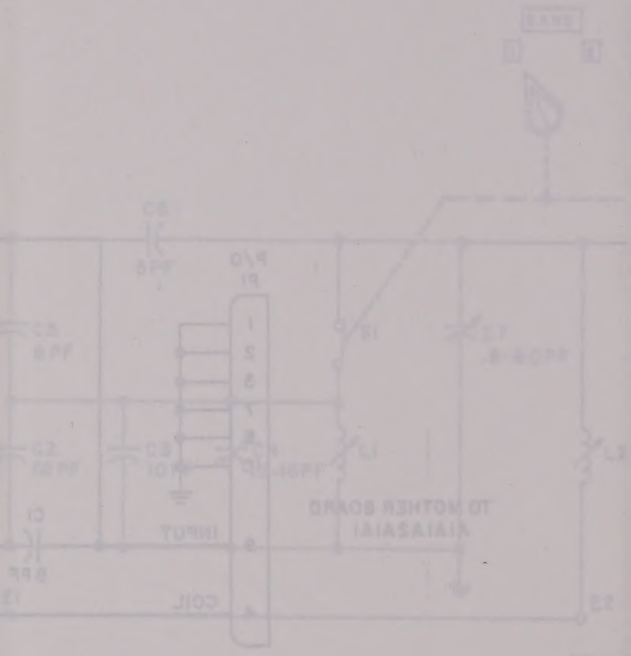

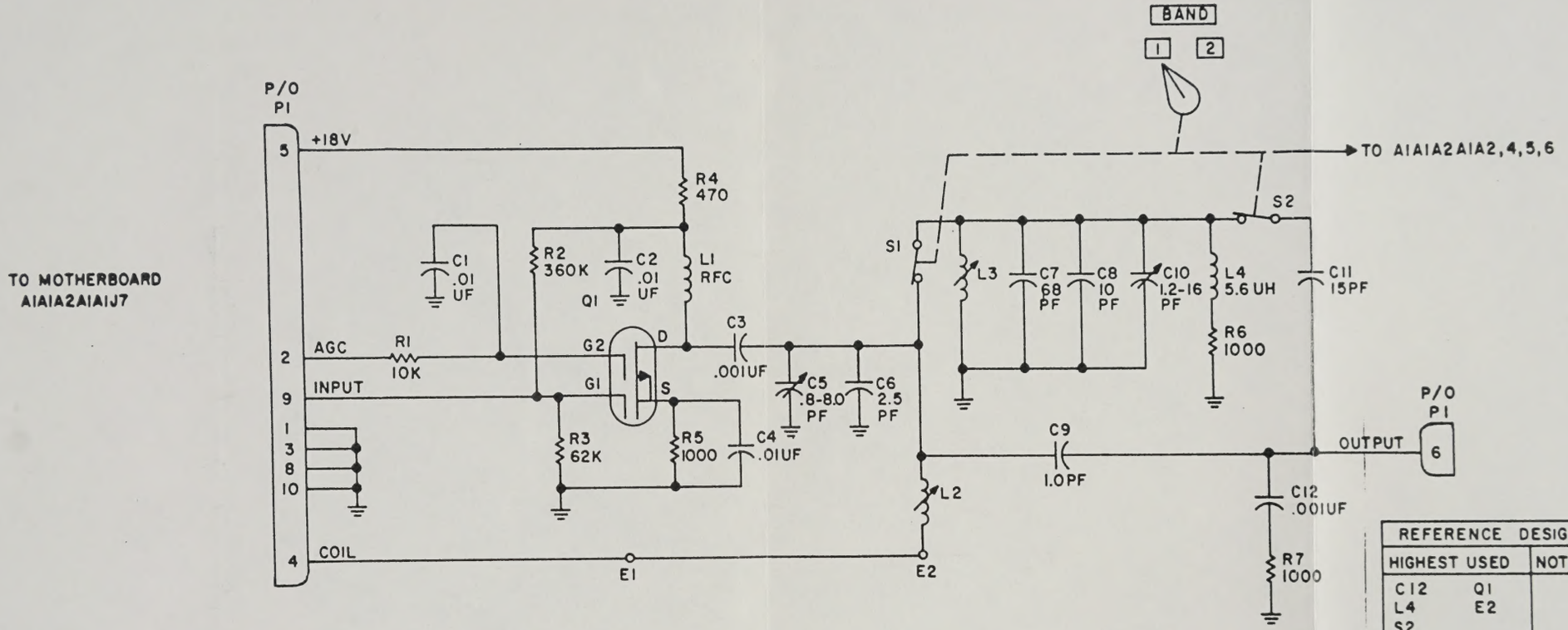

REFERENCE DESIGNATION	
HIGHEST USED	NOT USED
C12	Q1
L4	E2
S2	
R7	
P1	

NOTES:
1. PARTIAL REFERENCE DESIGNATIONS ARE SHOWN. FOR COMPLETE DESIGNATION PREFIX WITH A1A1A2A1A3.
2. UNLESS OTHERWISE SPECIFIED: RESISTOR VALUES ARE IN OHMS, 1/4W ±5%.

EL1AL051

Figure FO-7. Schematic diagram, first RF amplifier.

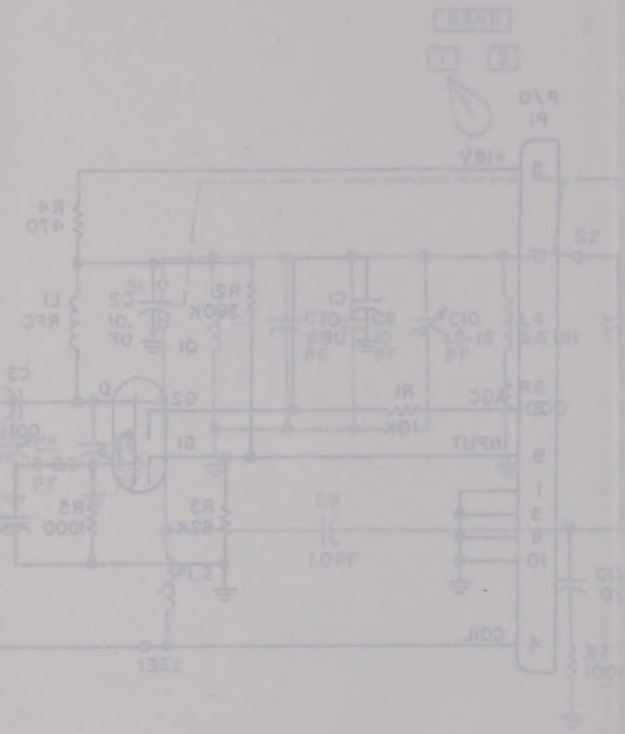

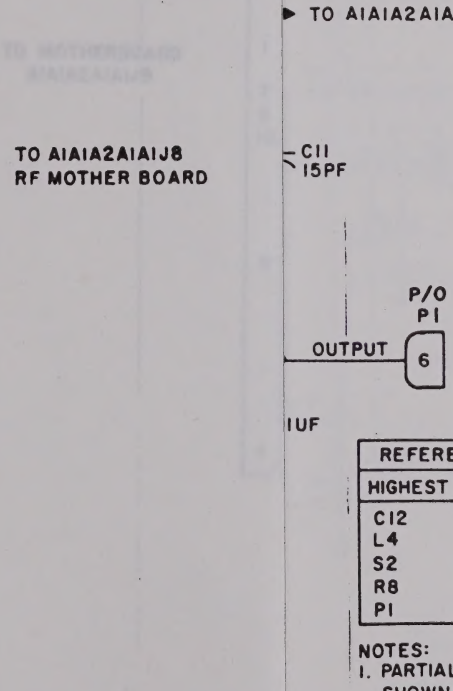

REFERENCE DESIGNATION	
HIGHEST USED	NOT USED
C12 Q1 L4 E2 S2 R8 P1	

NOTES:
1. PARTIAL REFERENCE DESIGNATIONS ARE SHOWN. FOR COMPLETE DESIGNATION PREFIX WITH A1A1A2A1A4.
2. UNLESS OTHERWISE SPECIFIED: RESISTOR VALUES ARE IN OHMS, 1/4W ±5%.

EL1AL052

agram, second RF amplifier.

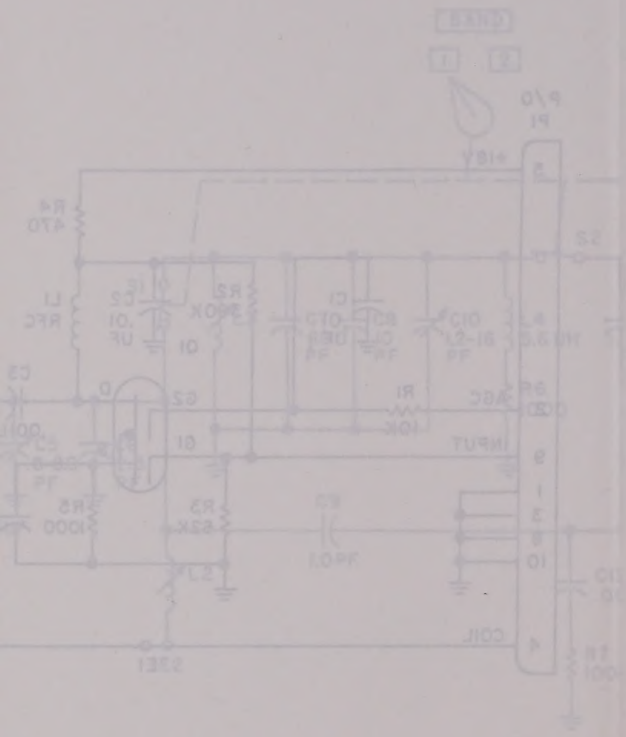

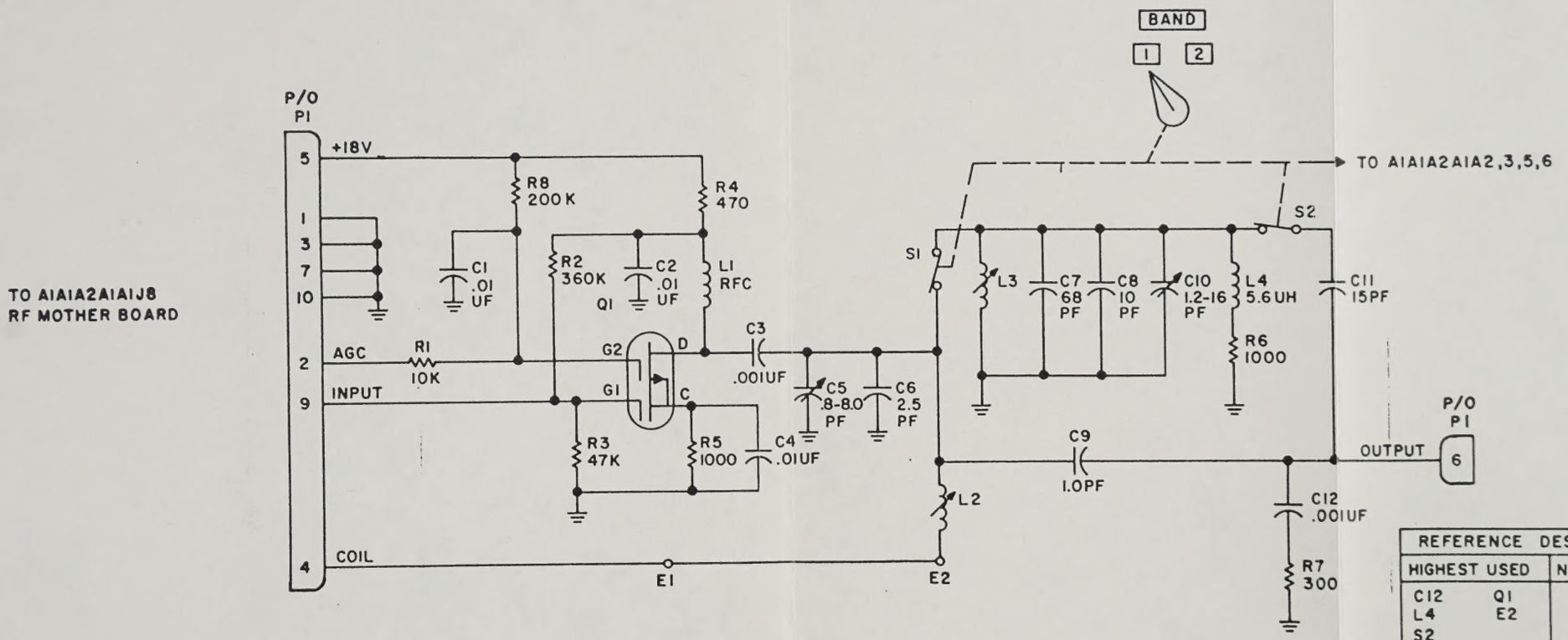

REFERENCE DESIGNATION	
HIGHEST USED	NOT USED
C12 Q1 L4 E2 S2 R8 P1	

NOTES:
1. PARTIAL REFERENCE DESIGNATIONS ARE SHOWN. FOR COMPLETE DESIGNATION PREFIX WITH A1A1A2A1A4.
2. UNLESS OTHERWISE SPECIFIED: RESISTOR VALUES ARE IN OHMS, 1/4W ±5%.

EL1AL052

Figure FO-8. Schematic diagram, second RF amplifier.

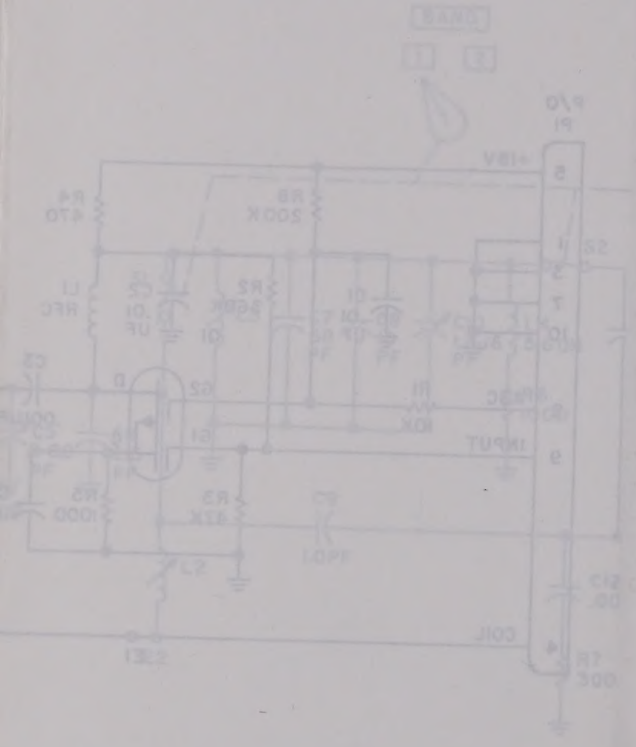

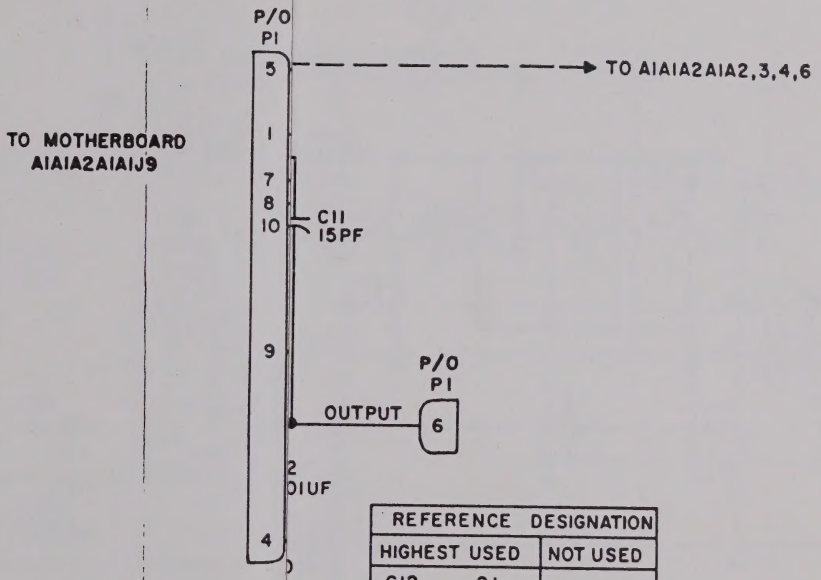

REFERENCE DESIGNATION	
HIGHEST USED	NOT USED
C12 Q1 L4 E2 S2 R8 P1	

NOTES:
1. PARTIAL REFERENCE DESIGNATIONS ARE SHOWN. FOR COMPLETE DESIGNATION PREFIX WITH A1A1A2A1A5.
2. UNLESS OTHERWISE SPECIFIED: RESISTOR VALUES ARE IN OHMS, 1/4W ±5%.

EL1AL053

diagram, third RF amplifier.

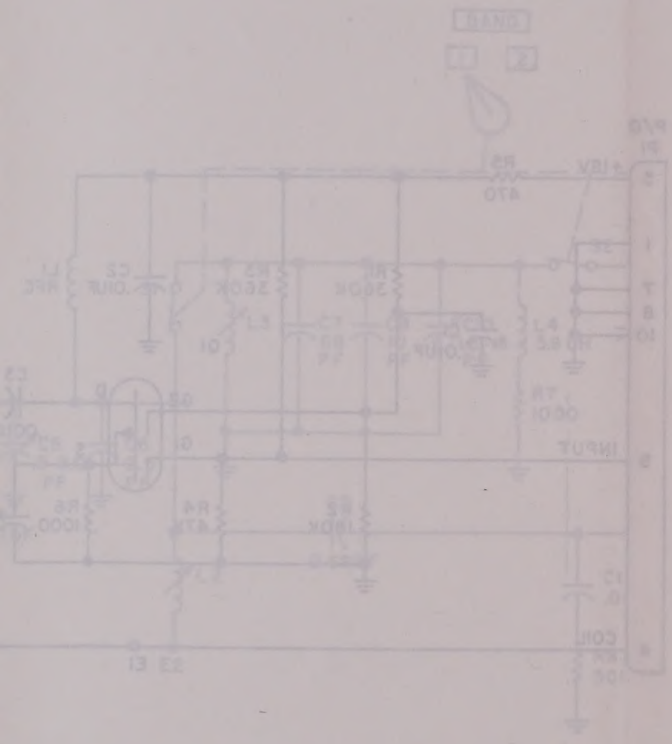

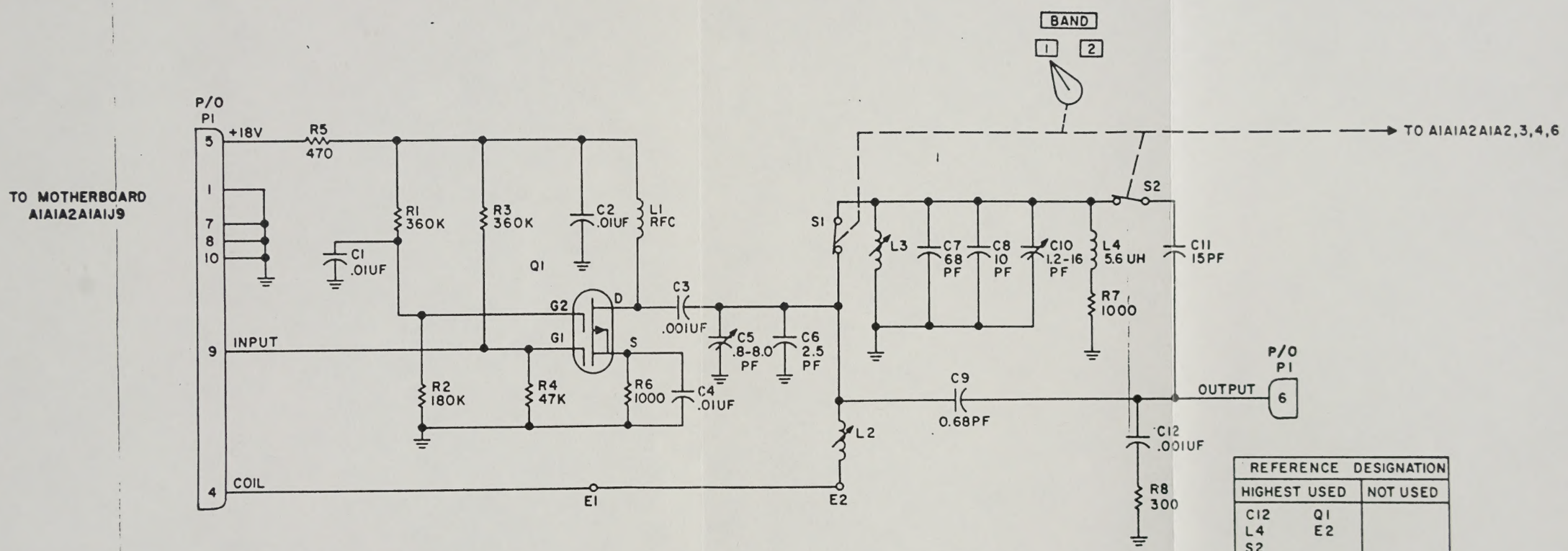

REFERENCE DESIGNATION	
HIGHEST USED	NOT USED
C12 Q1 L4 E2 S2 R8 P1	

NOTES:
1. PARTIAL REFERENCE DESIGNATIONS ARE SHOWN. FOR COMPLETE DESIGNATION PREFIX WITH A1A1A2A1A5.
2. UNLESS OTHERWISE SPECIFIED: RESISTOR VALUES ARE IN OHMS, 1/4W ±5%.

EL1AL053

Figure FO-9. Schematic diagram, third RF amplifier.

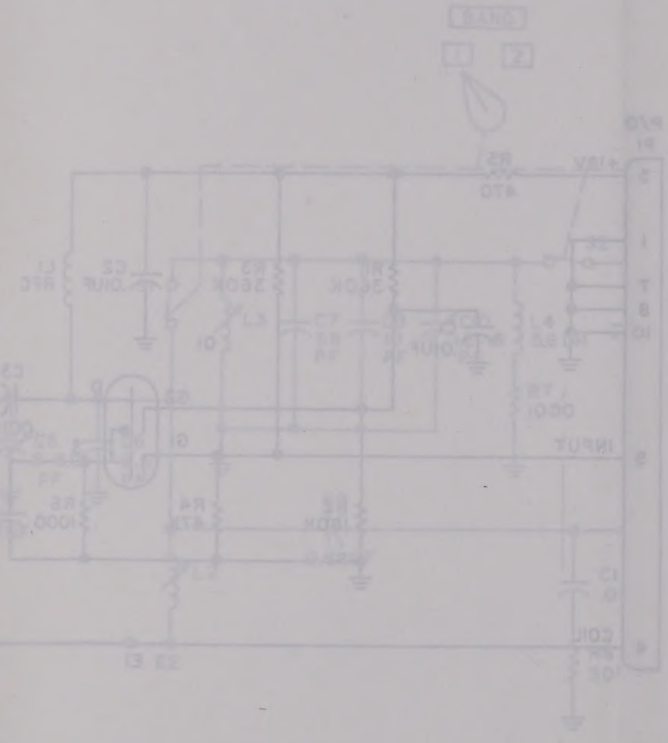

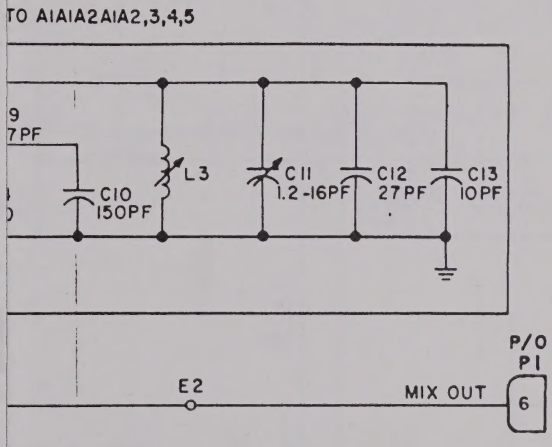

REFERENCE DESIGNATION	
HIGHEST USED	NOT USED
C17 Q2 L3 T1 S2 E2 R11 P1	

NOTES:
1. PARTIAL REFERENCE DESIGNATIONS ARE SHOWN. FOR COMPLETE DESIGNATION PREFIX WITH A1A1A2A1A6.
2. UNLESS OTHERWISE SPECIFIED: RESISTOR VALUES ARE IN OHMS, 1/4 W ±5%.

EL1AL054

atic diagram, oscillator-mixer.

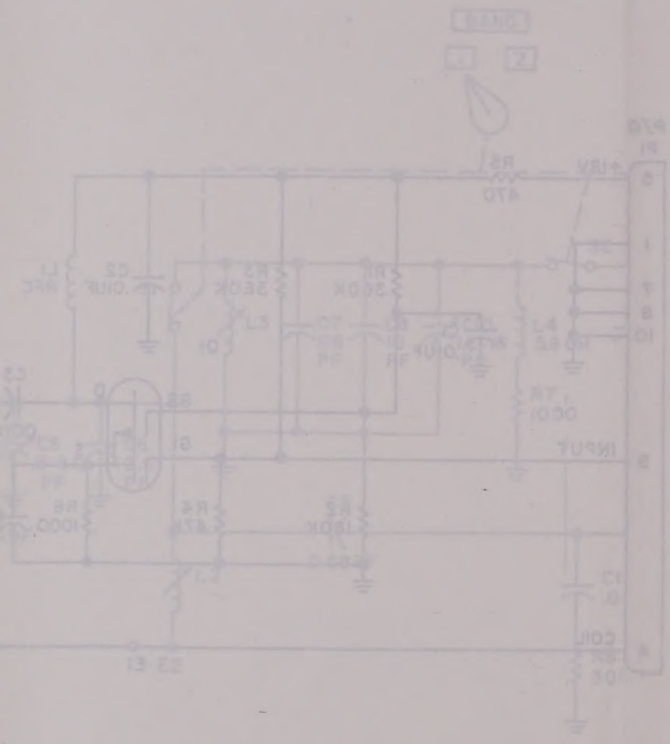

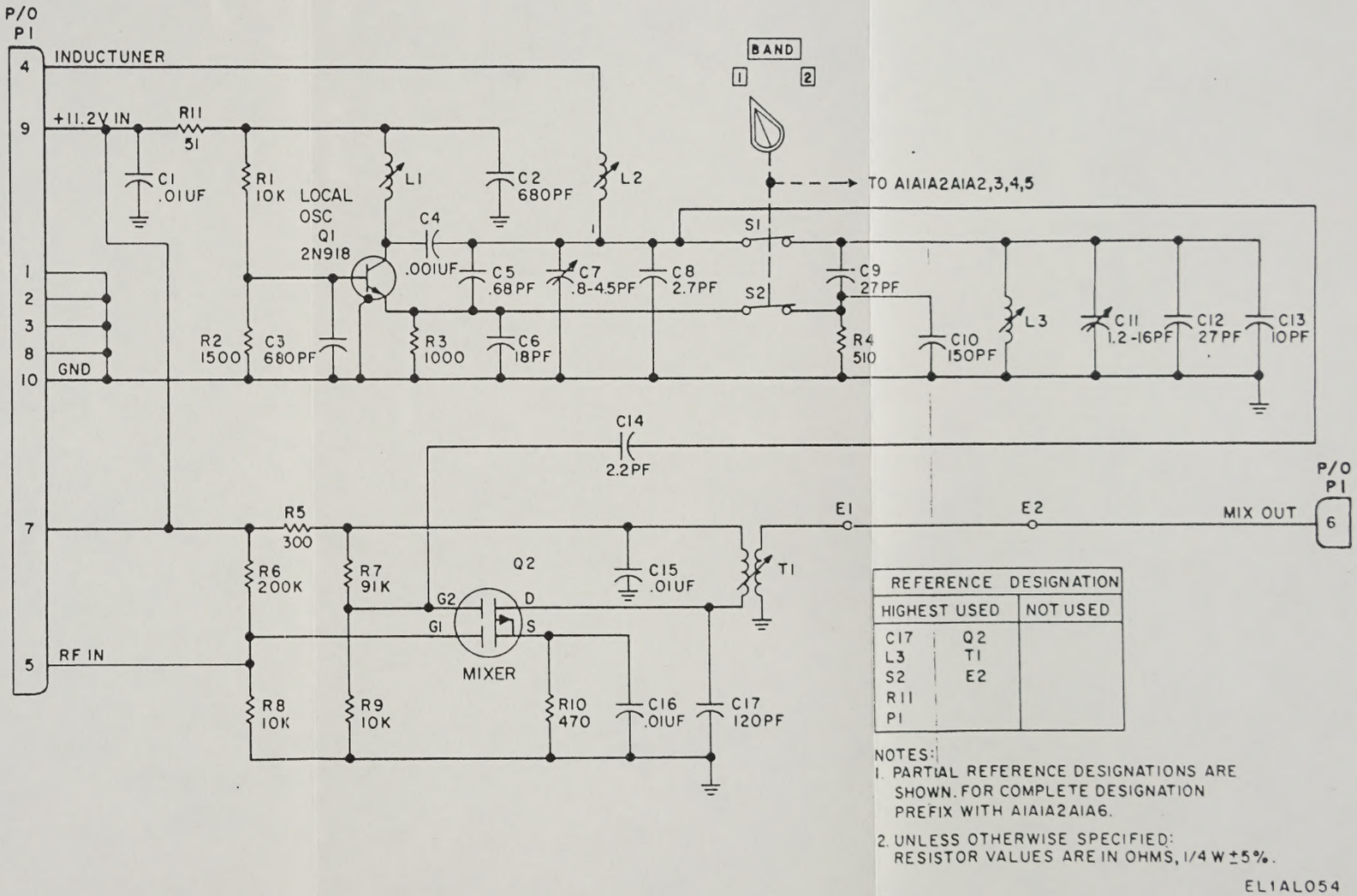

REFERENCE DESIGNATION	
HIGHEST USED	NOT USED
C17	Q2
L3	T1
S2	E2
R11	
P1	

NOTES:
1. PARTIAL REFERENCE DESIGNATIONS ARE SHOWN. FOR COMPLETE DESIGNATION PREFIX WITH A1A1A2A1A6.
2. UNLESS OTHERWISE SPECIFIED: RESISTOR VALUES ARE IN OHMS, 1/4 W ±5%.

EL1AL054

Figure FO-10. Schematic diagram, oscillator-mixer.

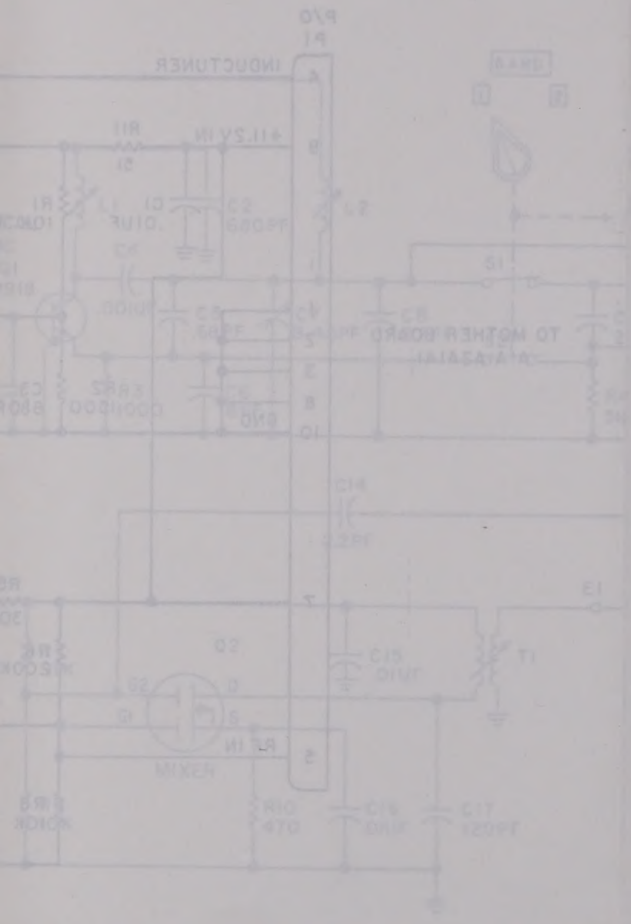

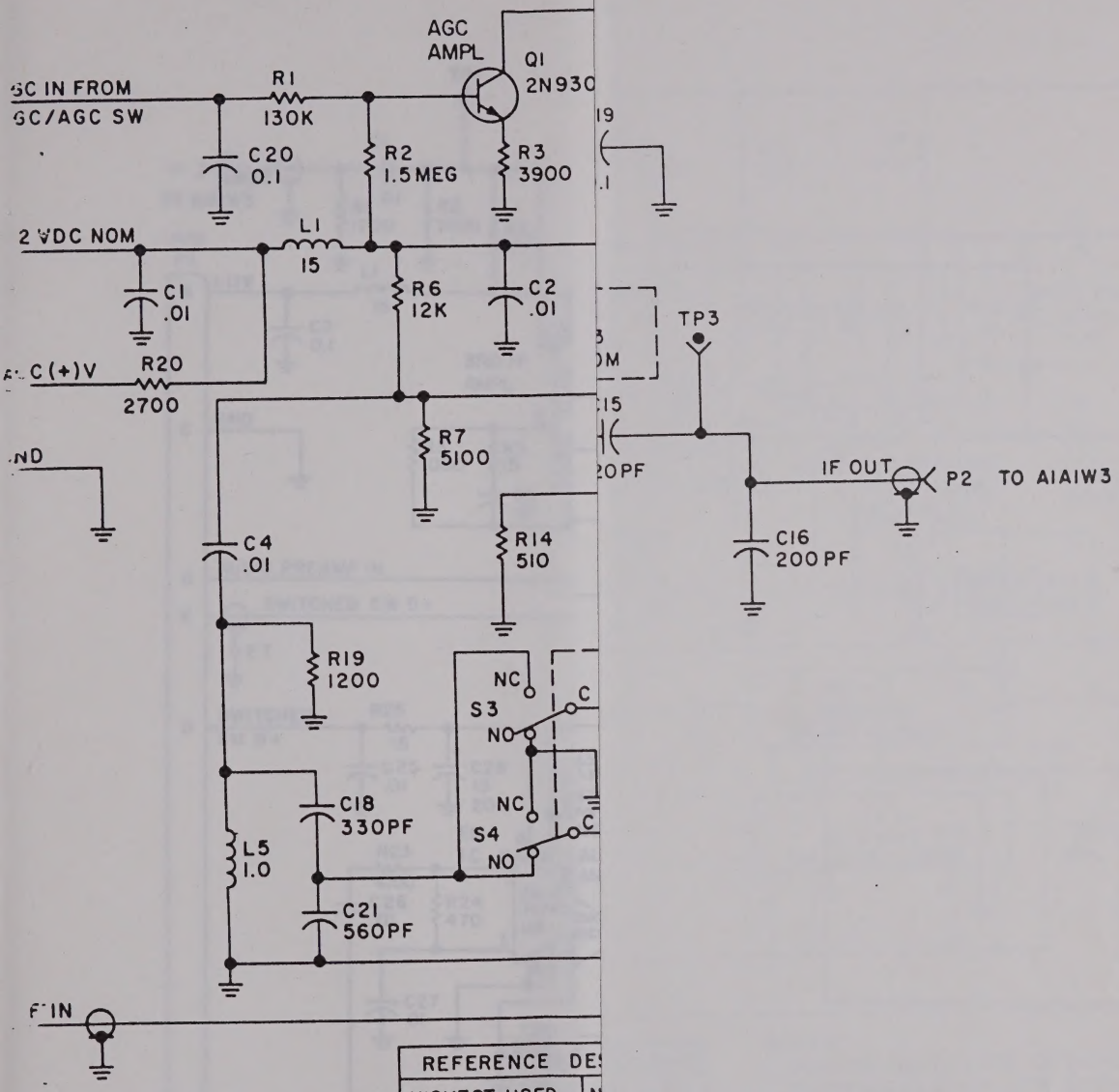

REFERENCE DES	
HIGHEST USED	N
C21	Q1
L5	FL2
S4	TP3
R20	U2
P3	

EL1AL055

Figure F0-11. Schematic diagram, IF amplifier

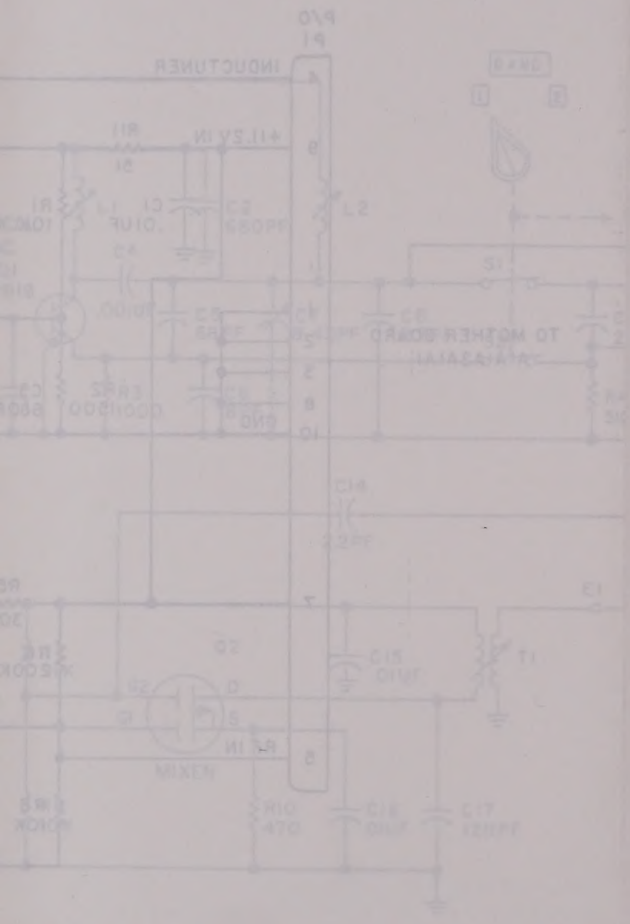

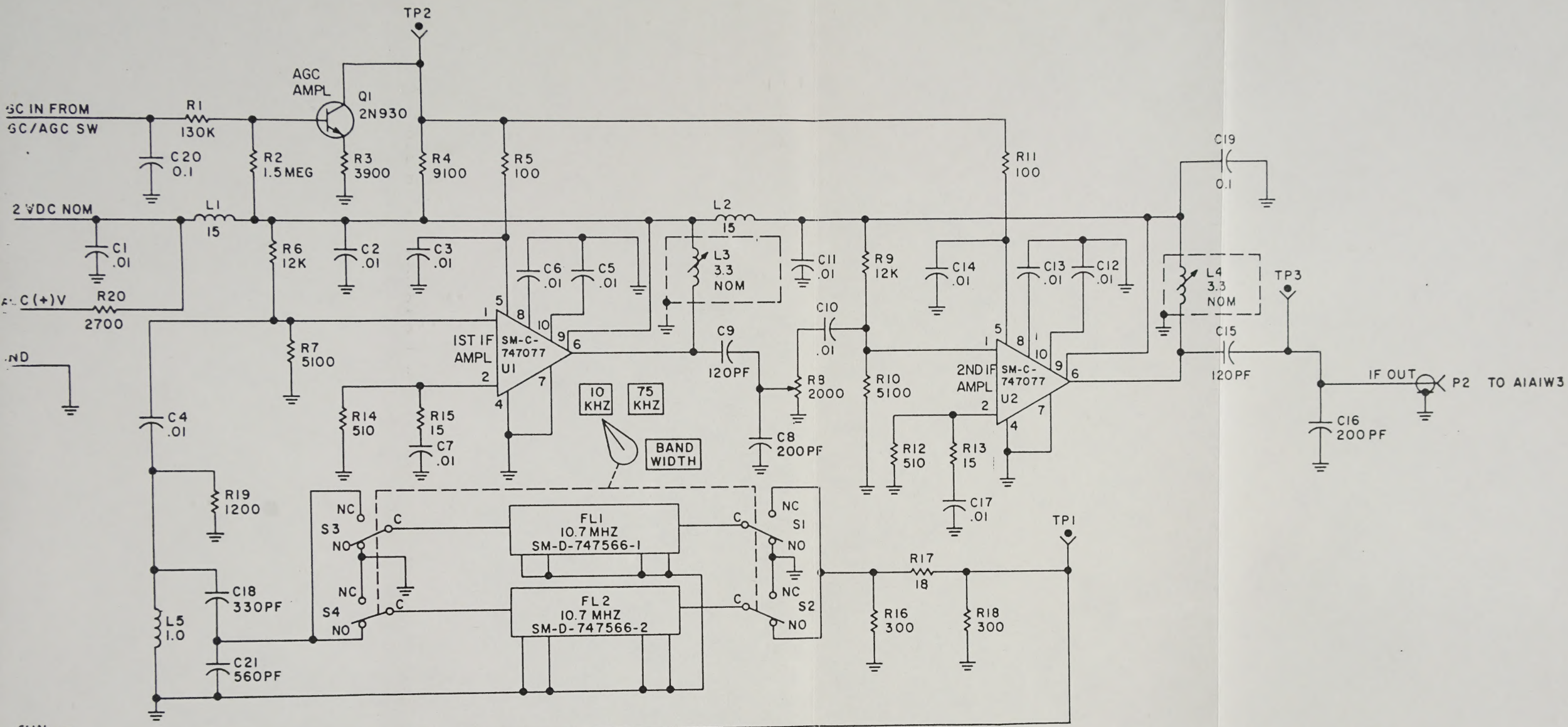

REFERENCE DESIGNATION	
HIGHEST USED	NOT USED
C21 Q1 L5 FL2 S4 TP3 R20 U2 P3	

NOTES:

1. PARTIAL REFERENCE DESIGNATIONS ARE SHOWN. FOR COMPLETE DESIGNATION PREFIX WITH A1A1A3A1.
2. UNLESS OTHERWISE SPECIFIED:
   RESISTOR VALUES ARE IN OHMS, 1/4W ±5%.
   CAPACITOR VALUES ARE IN MICROFARADS.
   INDUCTOR VALUES ARE IN MICROHENRIES.

EL1AL055

Figure F0-11. Schematic diagram, IF amplifier

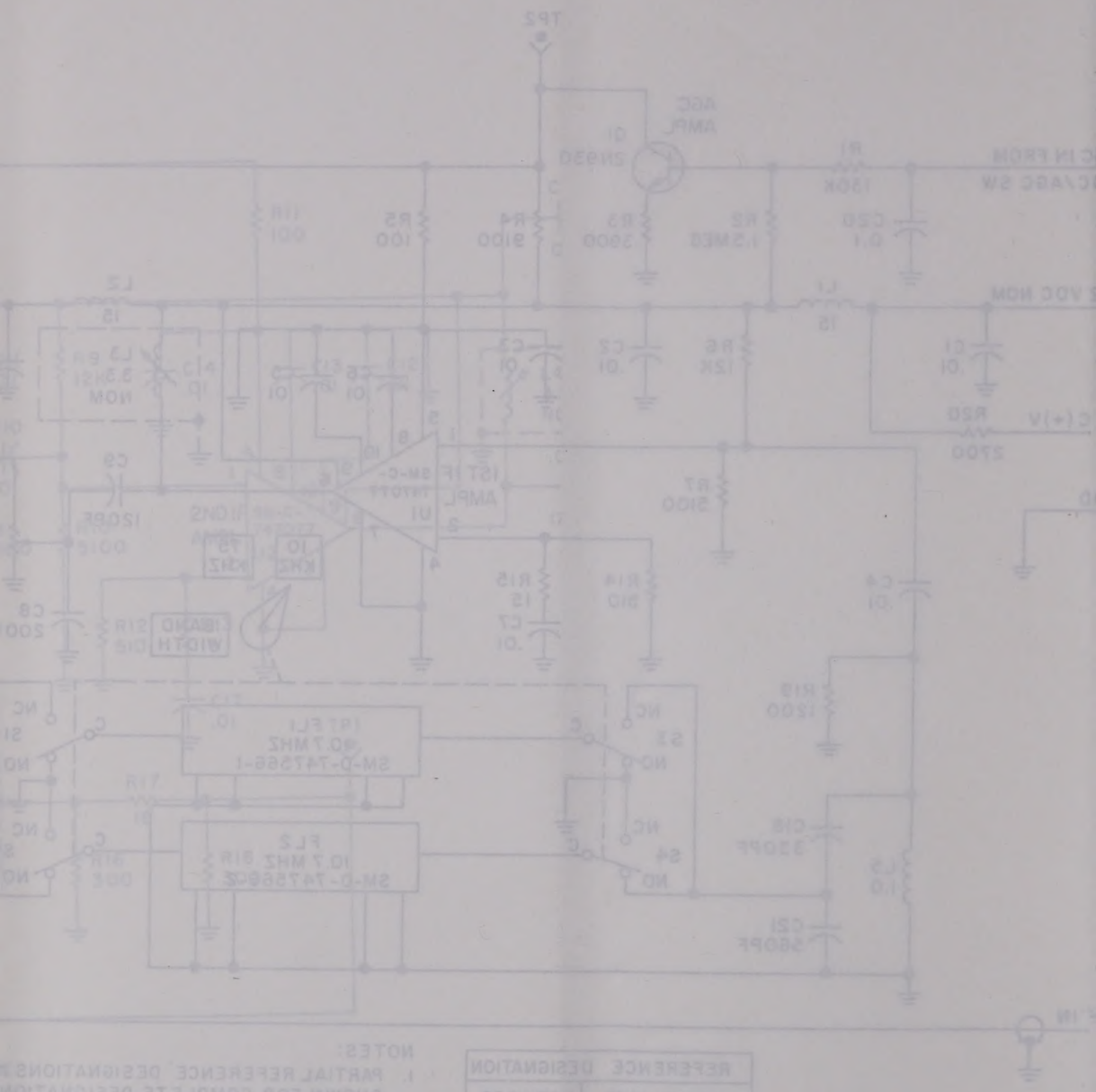

NOTES:

1. PARTIAL REFERENCE DESIGNATIONS SHOWN. FOR COMPLETE DESIGNATION PREFIX WITH A1A1A3A1.
2. UNLESS OTHERWISE SPECIFIED:
   RESISTOR VALUES ARE IN OHMS.
   CAPACITOR VALUES ARE IN MICROFARADS.
   INDUCTOR VALUES ARE IN MICROHENRYS.

REFERENCE DESIGNATION	
HIGHEST USED	NOT USED
C21	Q1
L5	FL2
S4	TP3
R20	U2
P3	

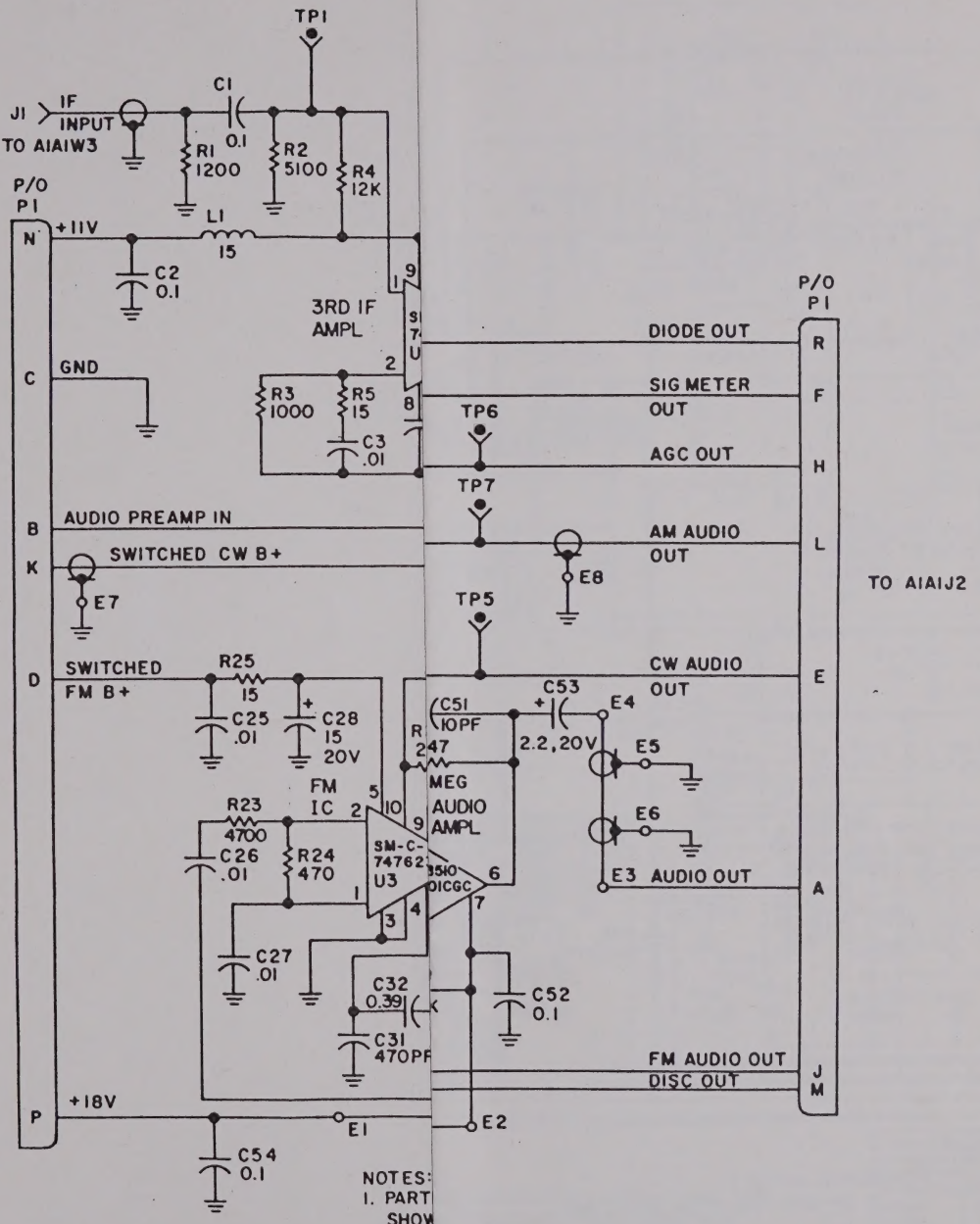

NOTES:
1. PART
SHOW
PREF
2. UNLE
RESI
CAPA
INDU

EL1AL056

ic diagram, detector.

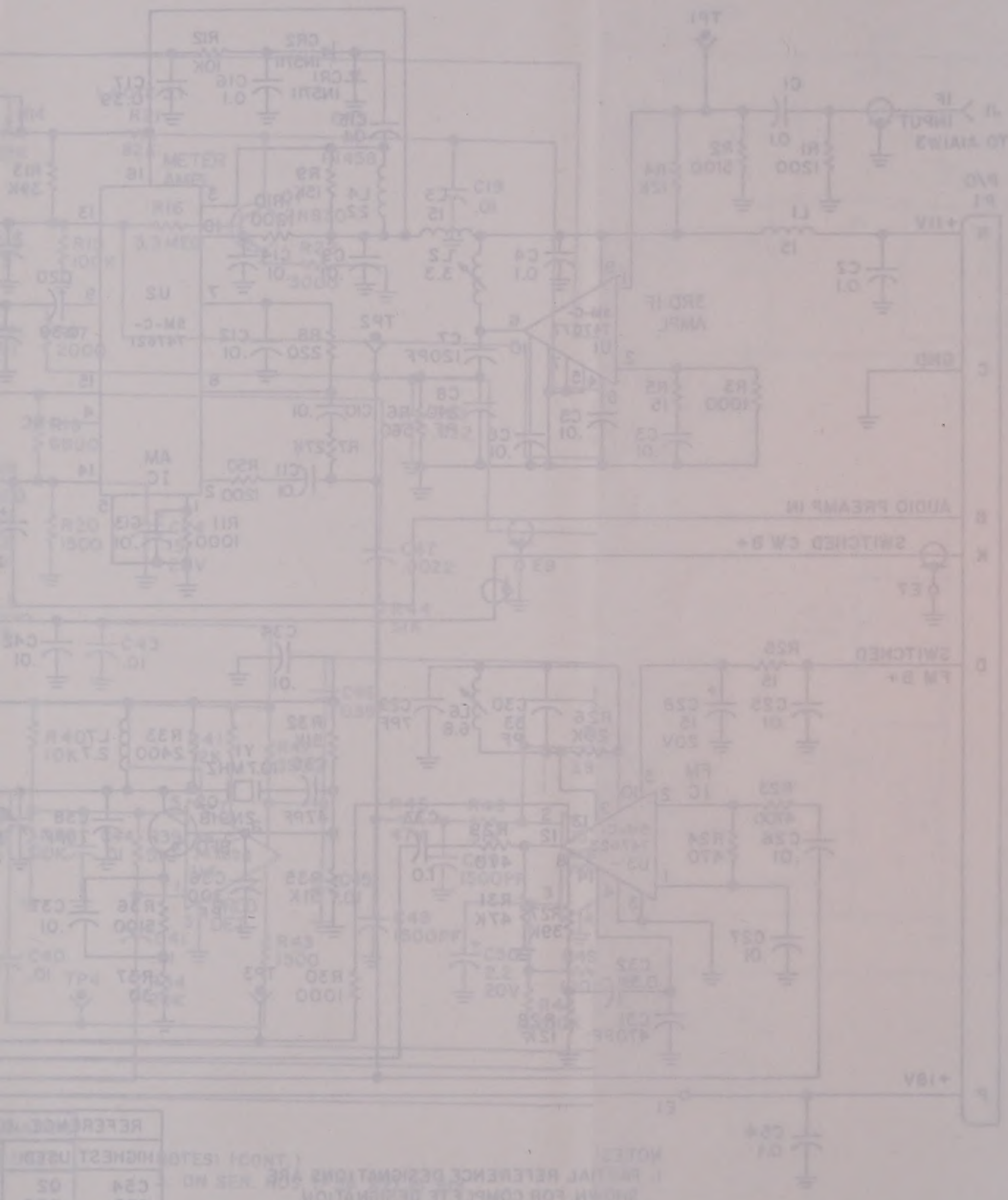

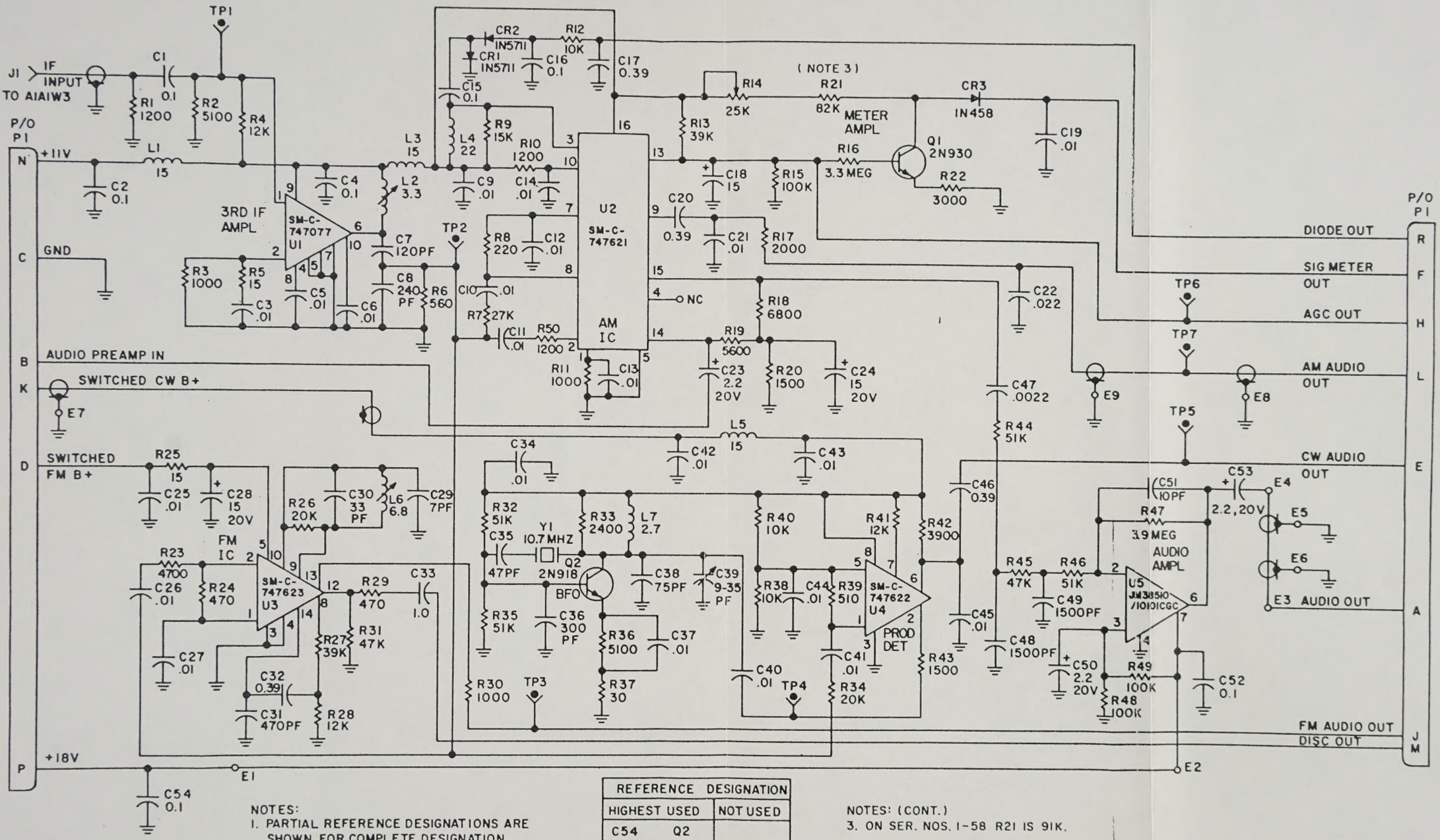

REFERENCE DESIGNATION		
HIGHEST USED		NOT USED
C54	Q2	
CR3	R50	
E9	TP7	
J1	U5	
L7	P1	

NOTES:
1. PARTIAL REFERENCE DESIGNATIONS ARE SHOWN. FOR COMPLETE DESIGNATION PREFIX WITH A1A1A4A1.
2. UNLESS OTHERWISE SPECIFIED: RESISTOR VALUES ARE IN OHMS. CAPACITOR VALUES ARE IN MICROFARADS. INDUCTOR VALUES ARE IN MICROHENRIES.

NOTES: (CONT.)
3. ON SER. NOS. 1-58 R21 IS 91K.

EL1AL056

Figure FO-12. Schematic diagram, detector.

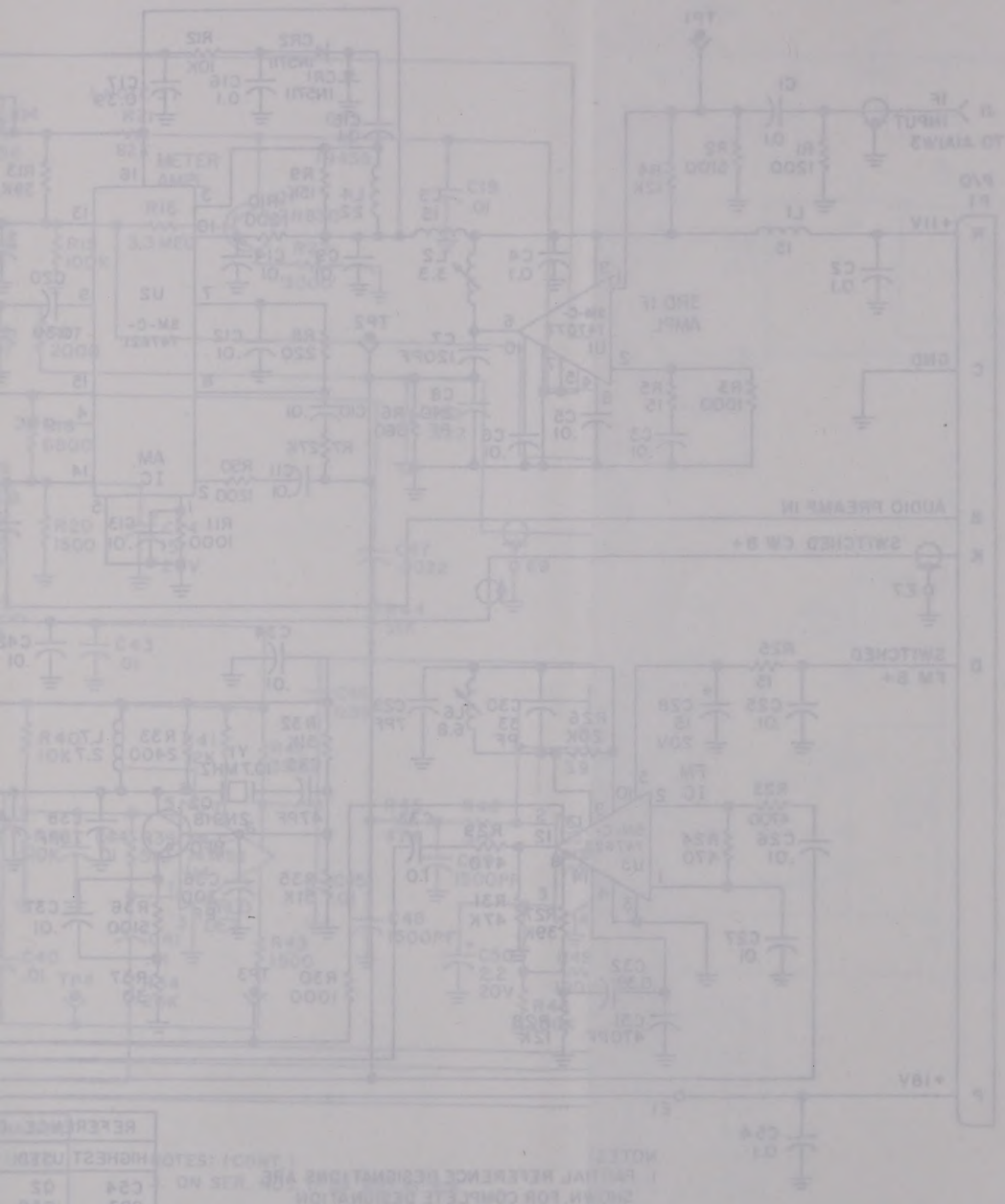

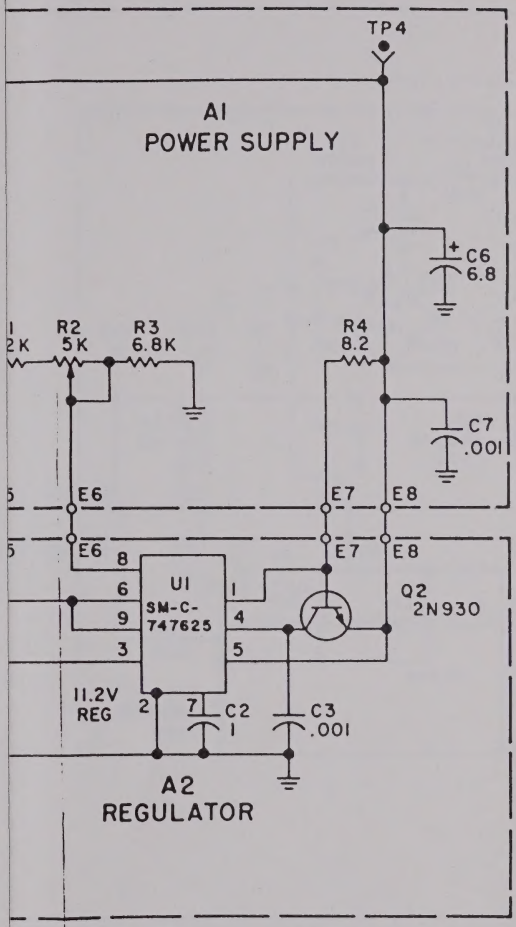

REFERENCE DESIGNATION			
HIGHEST USED		NOT USED	
A1	A2	A1	A2
C7 CR6 E9 L1 R5 P1 TP4	C3 CR3 E9 Q2 R1 U1		

EL1AL057

diagram, power supply

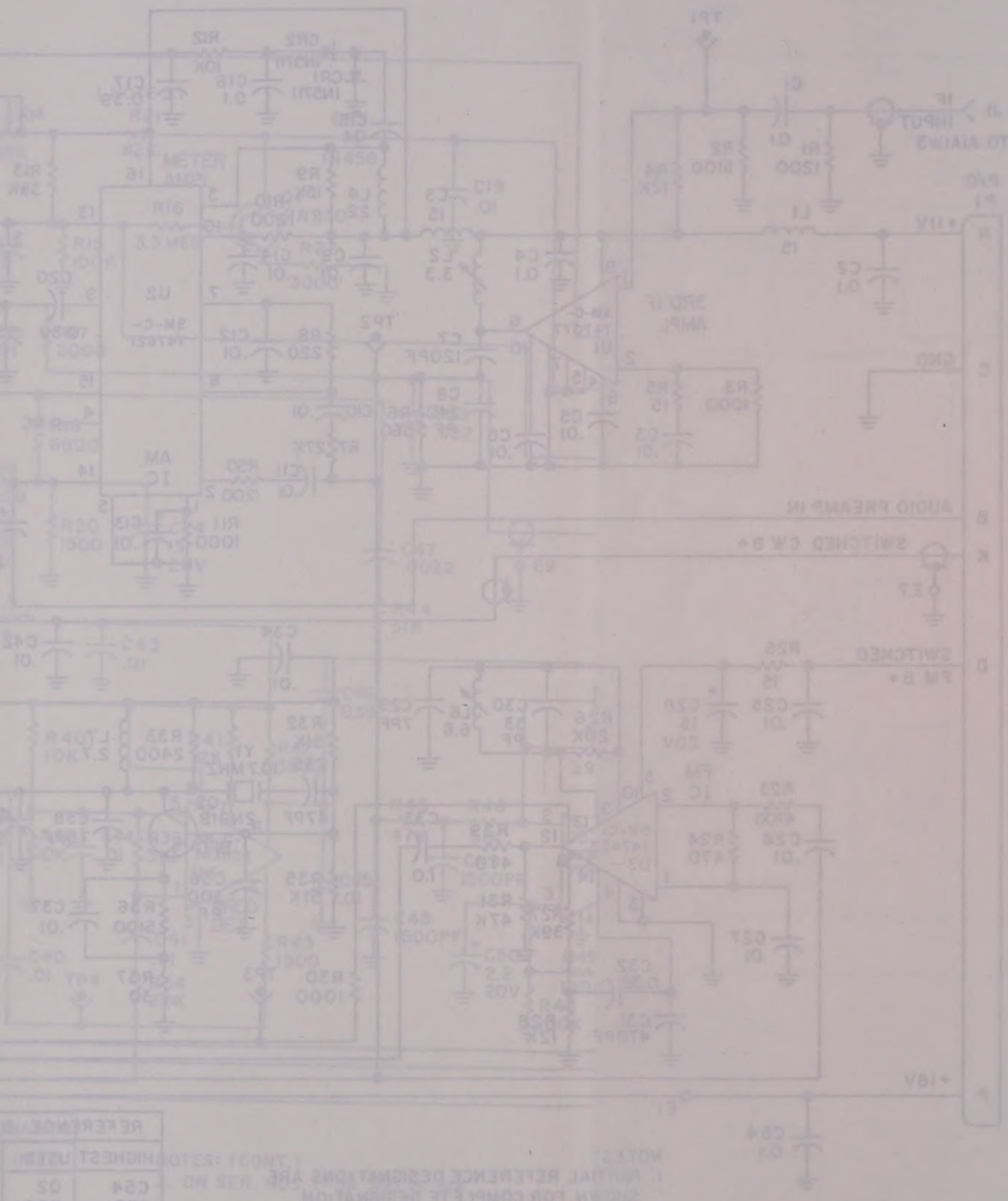

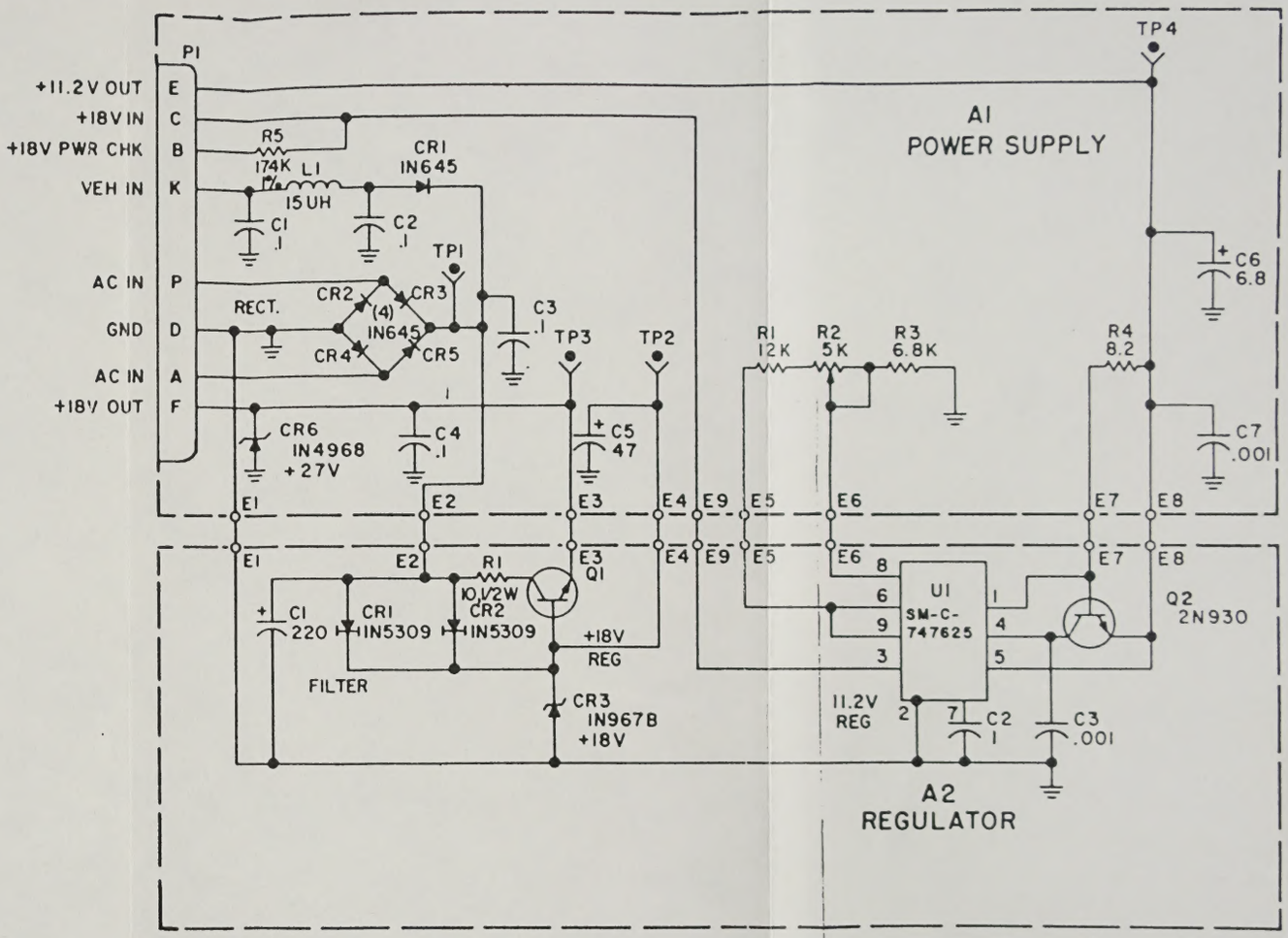

NOTES:

1. PARTIAL REFERENCE DESIGNATIONS ARE SHOWN. FOR COMPLETE DESIGNATION PREFIX WITH A1A1A5 AND BOARD DESIGNATOR.
2. UNLESS OTHERWISE SPECIFIED:
   CAPACITOR VALUES ARE IN MICROFARADS.
   RESISTOR VALUES ARE IN OHMS, 1/4 W, ±5%.

REFERENCE DESIGNATION			
HIGHEST USED		NOT USED	
A1	A2	A1	A2
C7	C3		
CR6	CR3		
E9	E9		
L1	Q2		
R5	R1		
P1	U1		
TP4			

EL1AL057

Figure FO-13. Schemetic diagram, power supply

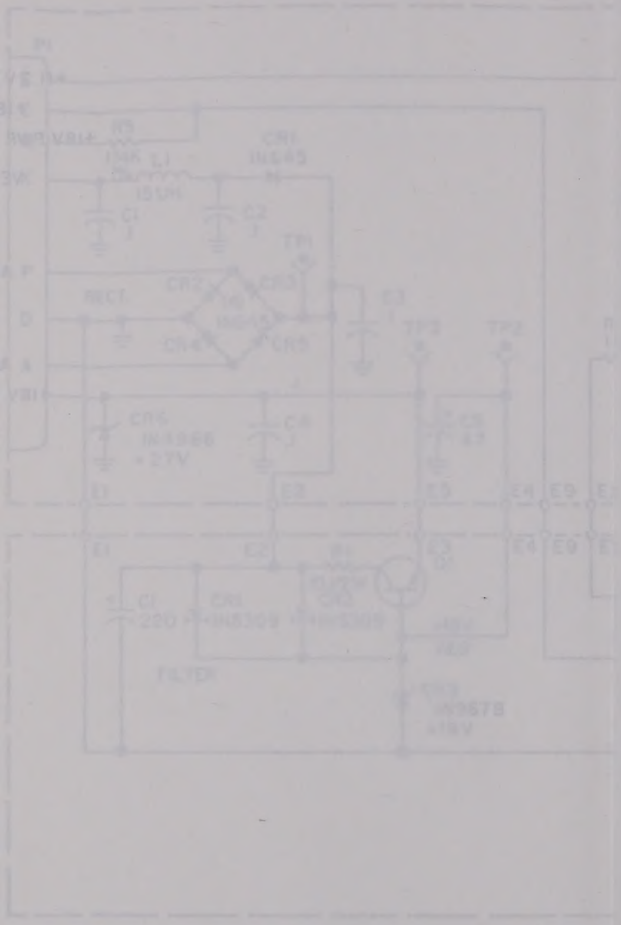

NOTES:

1. PARTIAL REFERENCE DESIGNATIONS ARE SHOWN. FOR CO
DESIGNATION PREFIX WITH A1A3 AND BOARD DESIGN
2. UNLESS OTHERWISE SPECIFIED:
CAPACITOR VALUES ARE IN MICROFARADS.
RESISTOR VALUES ARE IN OHMS, 1/4 W, 5%.

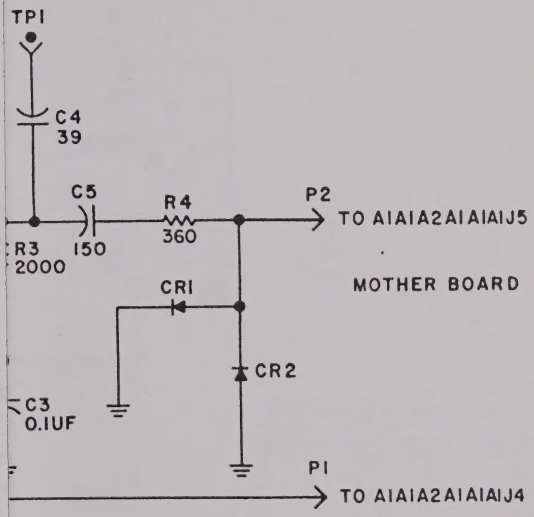

EL1AL058

...gram, calibration oscillator.

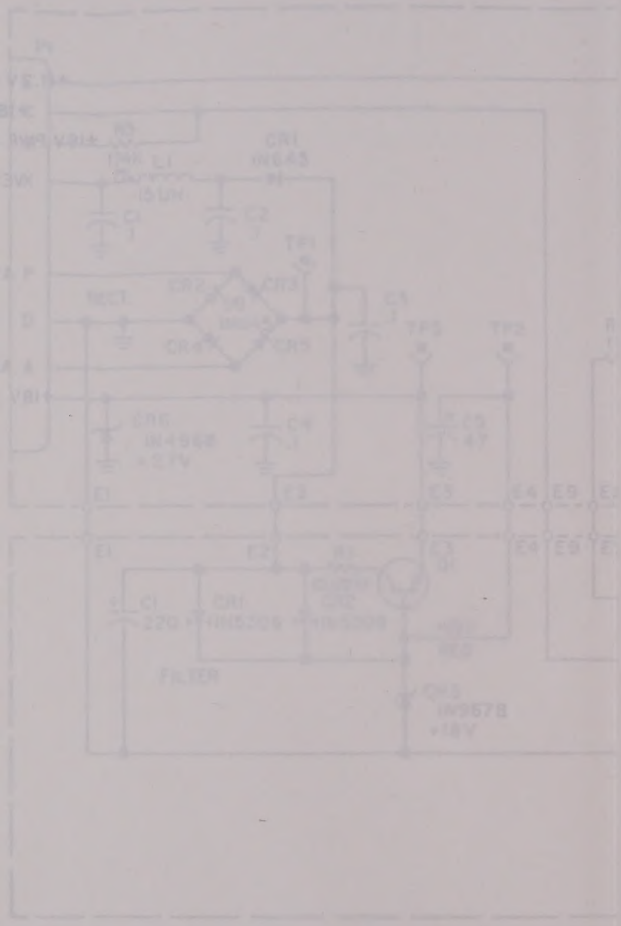

NOTES:

1. PARTIAL REFERENCE DESIGNATIONS ARE SHOWN. FOR CO
DESIGNATION PREFIX WITH A1A1 AND BOARD DESIGN

2. UNLESS OTHERWISE SPECIFIED:
CAPACITOR VALUES ARE IN MICROFARADS.
RESISTOR VALUES ARE IN OHMS, 1/4W, 5%.

Figure FD-13. Schemati

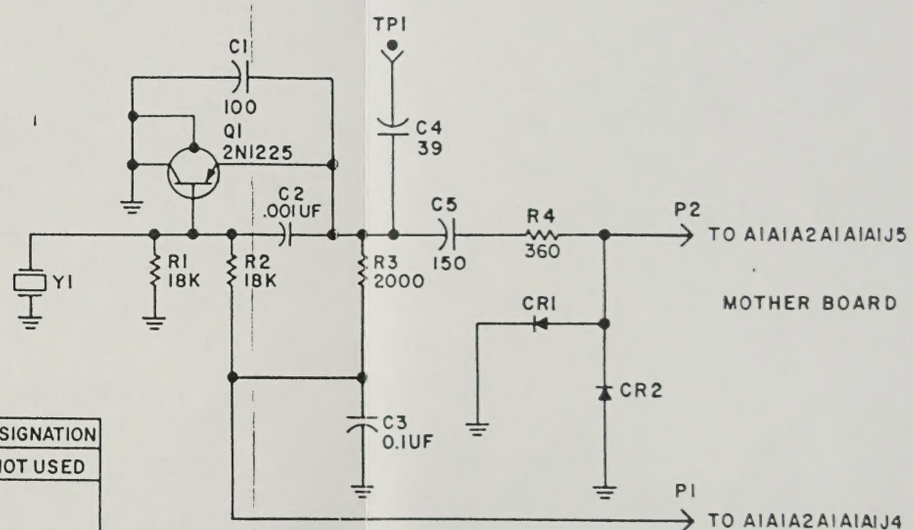

REFERENCE DESIGNATION	
HIGHEST USED	NOT USED
C5 Y1 CR2 TP1 R4 P2 Q1	

NOTES:
1. PARTIAL REFERENCE DESIGNATIONS ARE SHOWN. FOR COMPLETE DESIGNATION PREFIX WITH A1A1A6A1.
2. UNLESS OTHERWISE SPECIFIED: RESISTOR VALUES ARE IN OHMS, 1/8W ±5%. CAPACITOR VALUES ARE IN PICOFARADS.

EL1AL058

Figure FO-14. Schematic diagram, calibration oscillator.

REFERENCE DESIGNATOR	
HIGHEST USED	NOT USED
C5	Y1
CR2	TP1
R4	
P2	
Q1	

NOTES:
1. PARTIAL REFERENCE DESIGNATIONS ARE SHOWN. FOR COMPLETE DESIGNATION PREFIX WITH A1A1REA1.
2. UNLESS OTHERWISE SPECIFIED RESISTOR VALUES ARE IN OHMS, 1/8W ±5%. CAPACITOR VALUES ARE IN MICROFARADS.

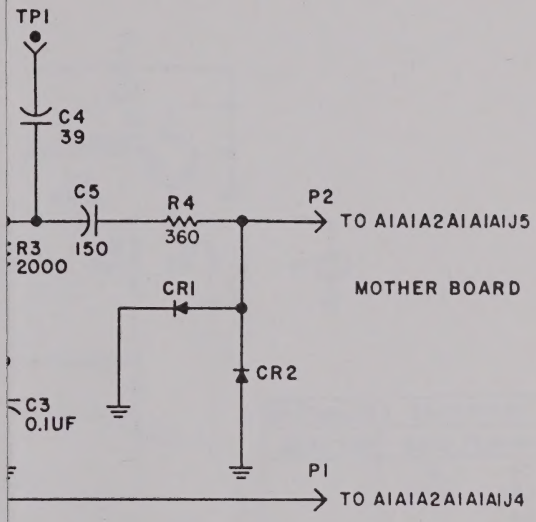

EL1AL058

gram, calibration oscillator.

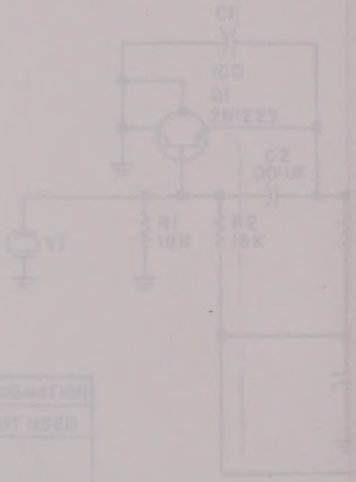

REFERENCE DESIGNATION	
HIGHEST USED	NOT USED
C5 Y1	
CR2 TP1	
R4	
P2	
Q1	

NOTES:

1. PARTIAL REFERENCE DESIGNATIONS ARE SHOWN. FOR COMPLETE DESIGNATION PREFIX WITH A(A1A6A).
2. UNLESS OTHERWISE SPECIFIED: RESISTOR VALUES ARE IN OHMS, 1/8W ± 5%. CAPACITOR VALUES ARE IN PICOFARADS.

Figure FD-1x Schematic di

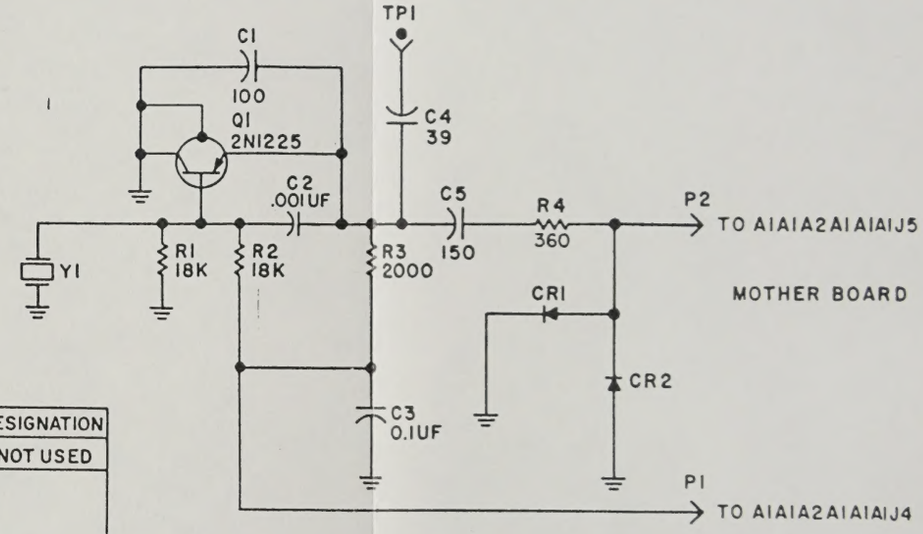

REFERENCE DESIGNATION	
HIGHEST USED	NOT USED
C5 Y1 CR2 TP1 R4 P2 Q1	

NOTES:
1. PARTIAL REFERENCE DESIGNATIONS ARE SHOWN. FOR COMPLETE DESIGNATION PREFIX WITH A1A1A6A1.
2. UNLESS OTHERWISE SPECIFIED: RESISTOR VALUES ARE IN OHMS, 1/8W ±5%. CAPACITOR VALUES ARE IN PICOFARADS.

EL1AL058

Figure FO-14. Schematic diagram, calibration oscillator.

REFERENCE DESIGNATION		
HIGHEST USED		NOT USED
C5	Y1	
CR2	TP1	
R4		
P2		
Q1		

NOTES:
1. PARTIAL REFERENCE DESIGNATIONS ARE SHOWN. FOR COMPLETE DESIGNATION PREFIX WITH A1A1A6A1.
2. UNLESS OTHERWISE SPECIFIED RESISTOR VALUES ARE IN OHMS, 1/8W ± 5%. CAPACITOR VALUES ARE IN MICROFARADS.

Figure FO-11 Schematic Ra

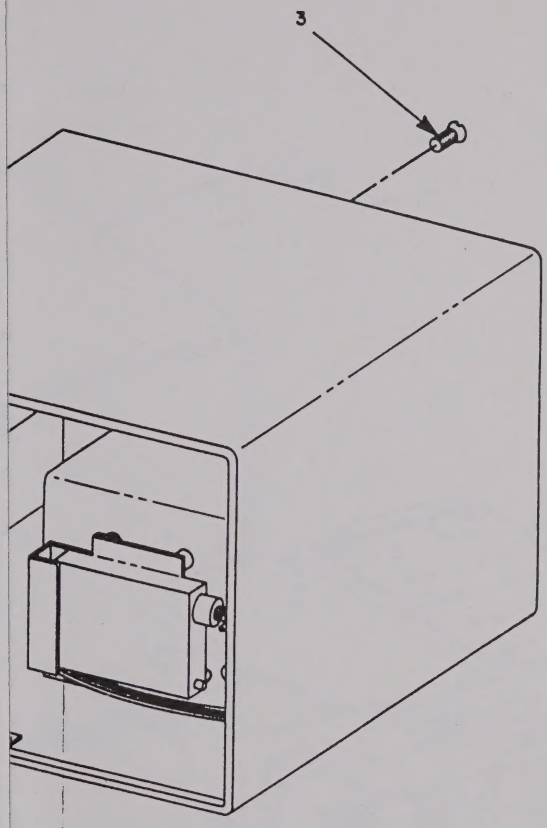

EL1ALO59

sembly
er assembly

er parts location.

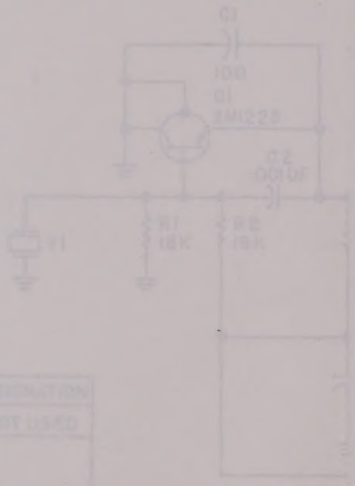

REFERENCE DESIGNATION		
HIGHEST USED		NOT USED
C5	Y1	
CR2	TP1	
R4		
P2		
Q1		

NOTES:

1. PARTIAL REFERENCE DESIGNATIONS ARE SHOWN. FOR COMPLETE DESIGNATION PREFIX WITH A1/A1A1A1.
2. UNLESS OTHERWISE SPECIFIED: RESISTOR VALUES ARE IN OHMS, 1/5W ± 5%. CAPACITOR VALUES ARE IN PICOFARADS.

Figure 9D-1a Schematic [illegible]

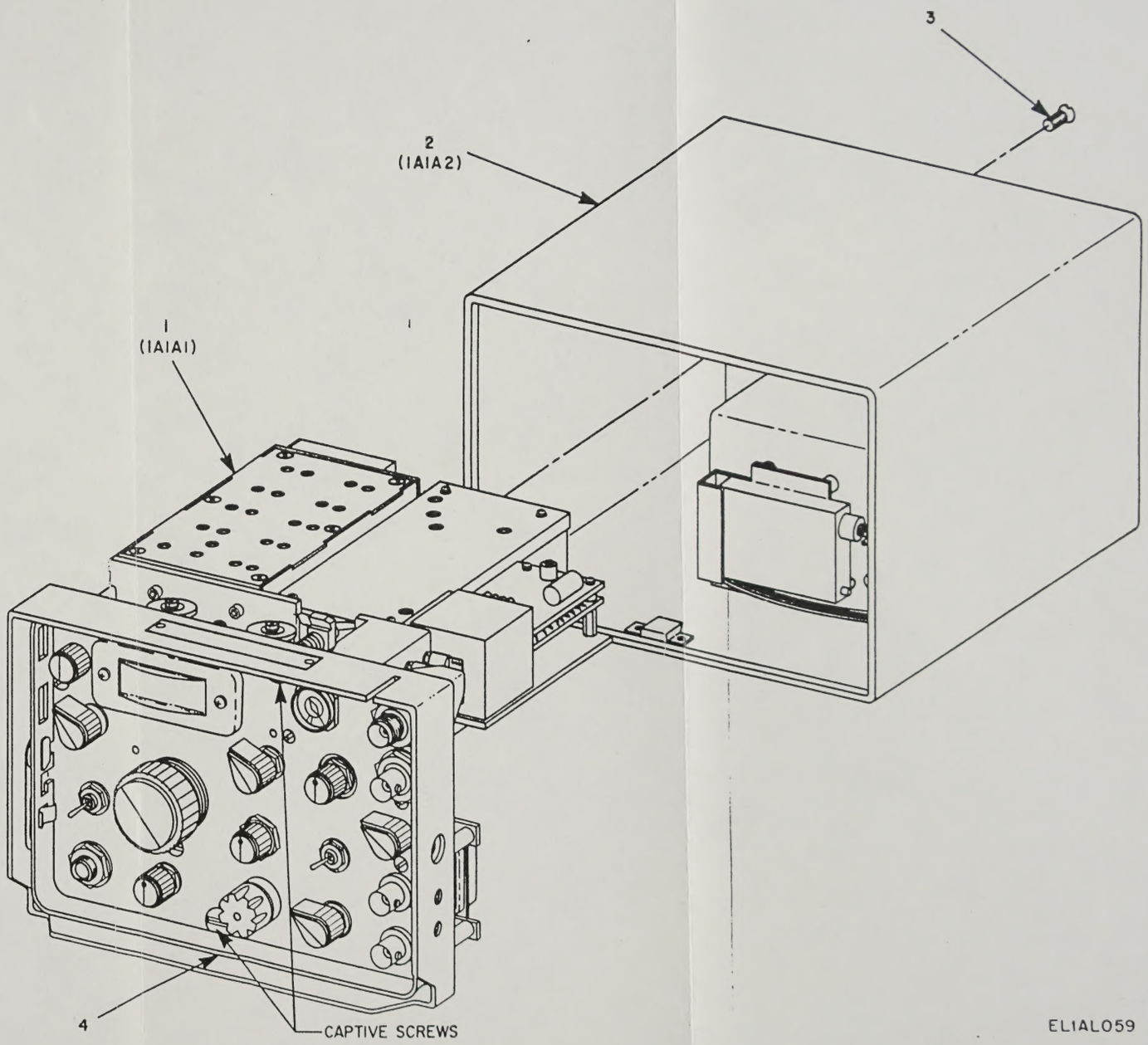

1 Radio assembly
2 Dust cover assembly
3 Screw
4 Handle

Figure FO-15. Receiver parts location.

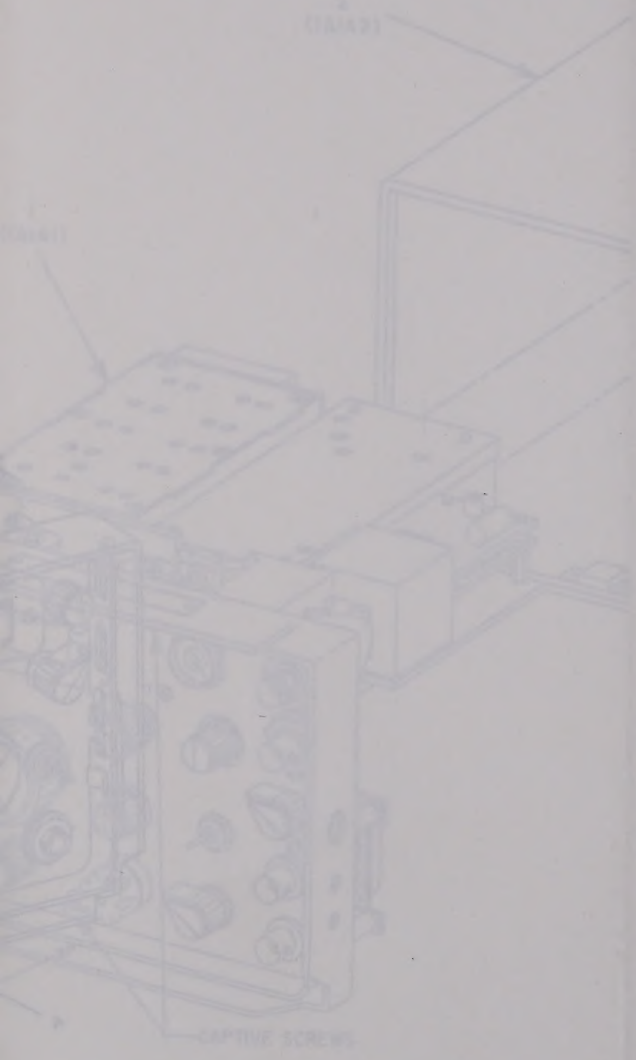
CAPTIVE SCREWS

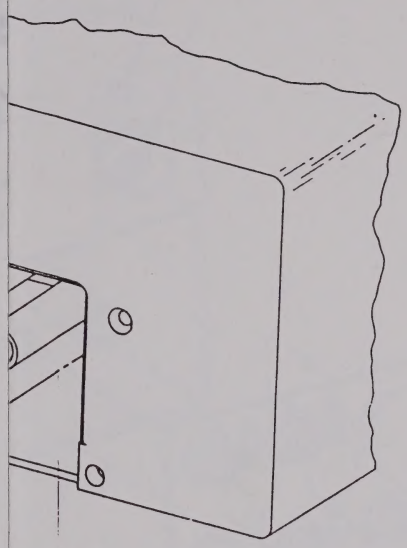

NOTE:
FOR COMPLETE REFERENCE DESIGNATION
PREFIX ALL SYMBOLS WITH 1A1A2.

EL1AL060

nnector
switch
ssembly

over
r

wer

over parts location.

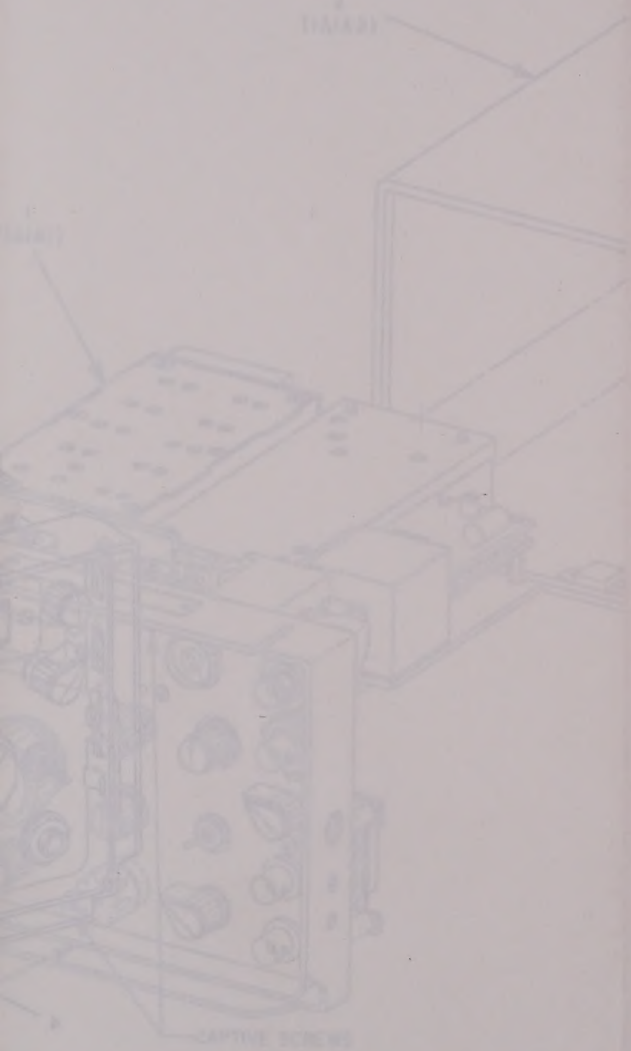

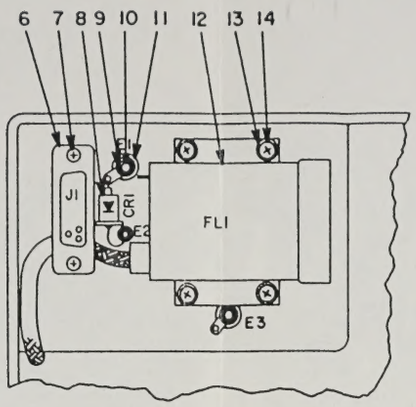

PARTIAL VIEW INSIDE COVER

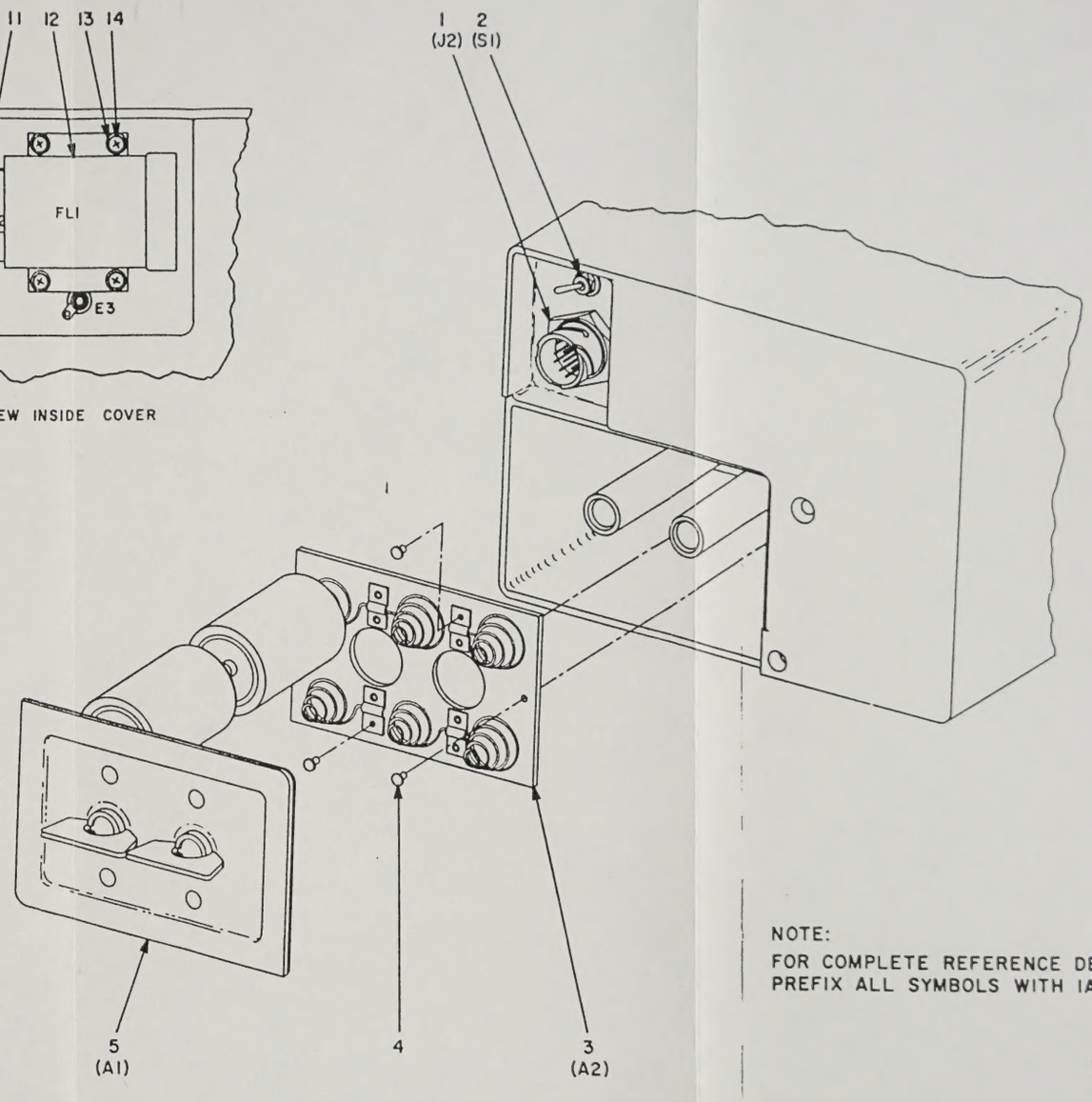

NOTE:
FOR COMPLETE REFERENCE DESIGNATION PREFIX ALL SYMBOLS WITH 1A1A2.

ELIAL060

1 Power connector
2 INT-EXT switch
3 Contact assembly
4 Rivet
5 Battery cover
6 Connector
7 Screw
8 Diode
9 Washer
10 Rivet
11 Washer
12 Filter, power
13 Washer
14 Screw

Figure FO-16. Dust cover parts location.

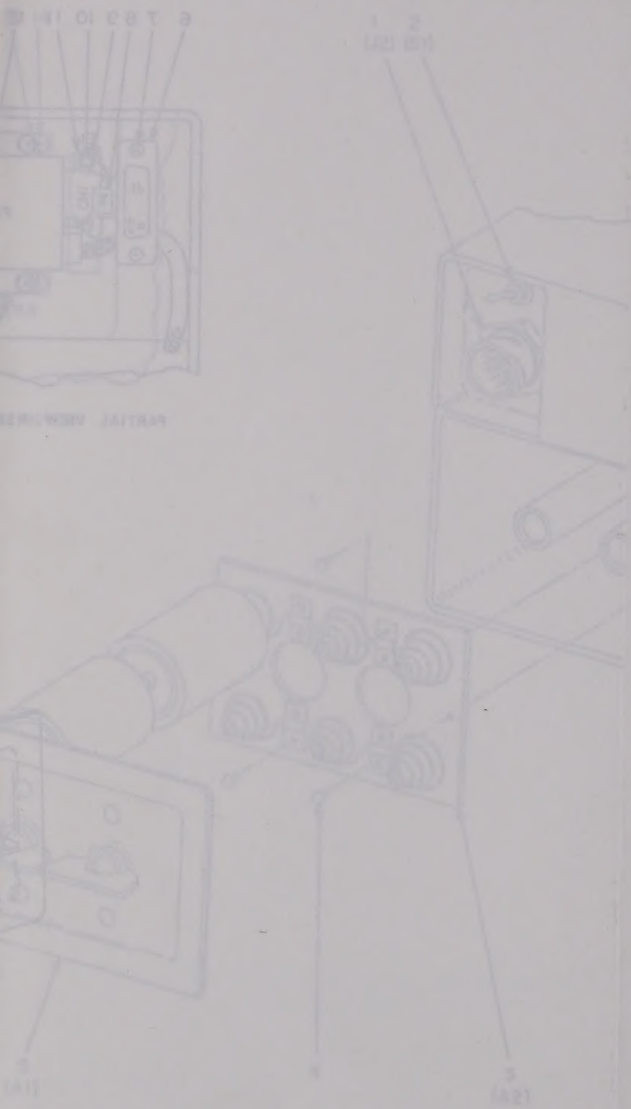

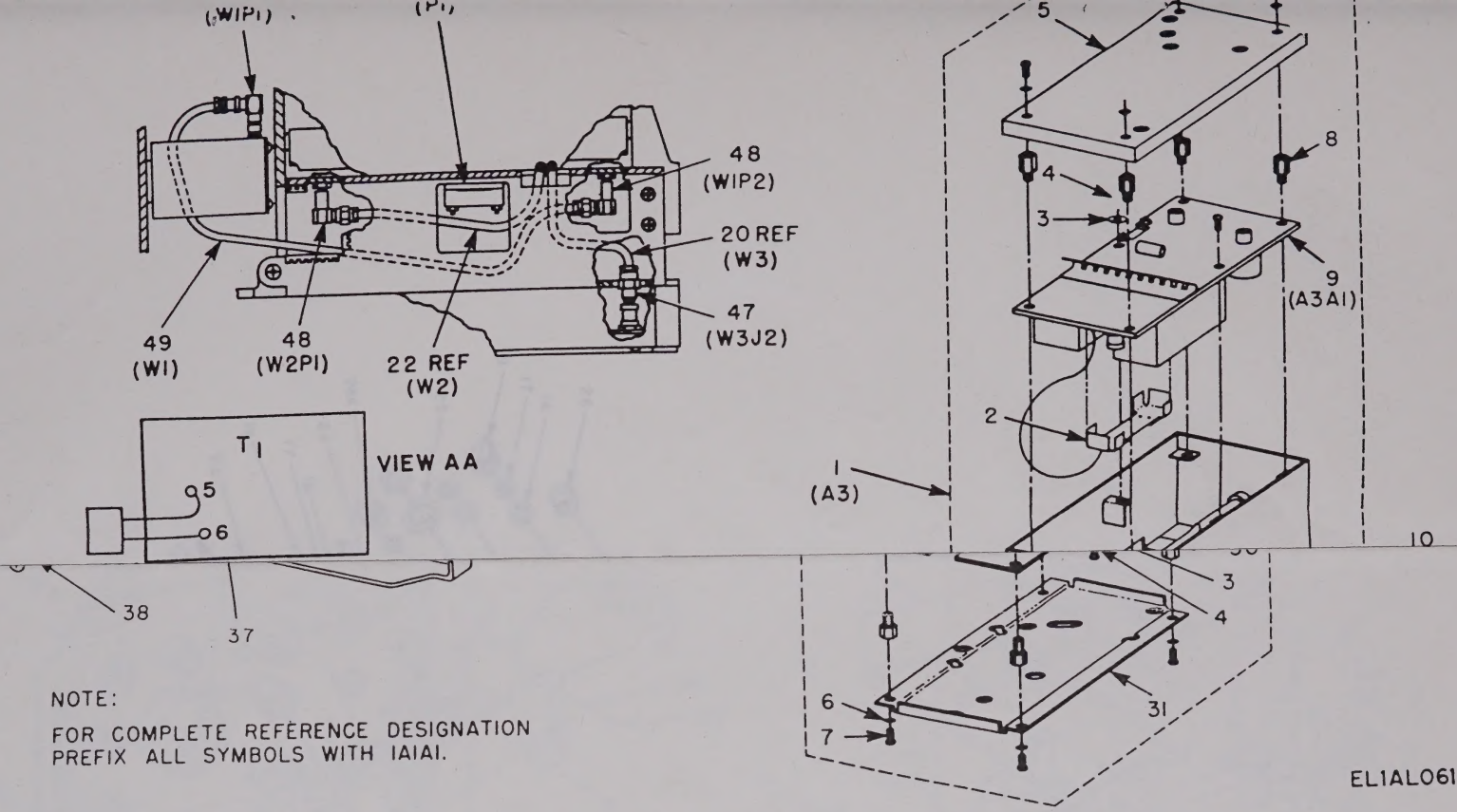

NOTE:

FOR COMPLETE REFERENCE DESIGNATION PREFIX ALL SYMBOLS WITH 1A1A1.

EL1AL061

KEY to fig F0-17

1 *If amplifier assembly*
2 *Actuator switch*
3 *Washer*
4 *Screw*
5 *Cover*
6 *Washer*
7 *Screw*
8 *Post*
9 *Ckt card assy, if. amplifier*
10 *Power supply assembly*
11 *Screw*
12 *Washer*
13 *Ckt card assy, power supply*
13A *Insulating washer*
14 *Ckt card assy, regulator*
15 *Transformer*
16 *Post*
17 *Connector*
18 *Connector*
19 *Connector*
20 *Cable assembly*
21 *Screw*
22 *Cable assembly*
23 *Screw*
24 *Screw*
25 *Screw*
26 *Connector*
27 *Post*
28 *Detector assembly*
29 *Circuit card assembly, detector*
30 *Post*
31 *Cover*
32 *Screw*
33 *Connector*
34 *Washer*
35 *Screw*
36 *Boot*
37 *Knob*
38 *Screw*
39 *Control panel assembly*
40 *Gear and tuner assembly*
40A *Capacitor*
40B *Capacitor*
41 *Bracket*
42 *Washer*
43 *Nut*
44 *Calibration oscillator assembly*
45 *Circuit card assembly, cal oscillator*
46 *Screw*
46A *Capacitor*
47 *Connector*
48 *Connector*
49 *Cable assembly*

Figure F0-17. Radio assembly, parts location.

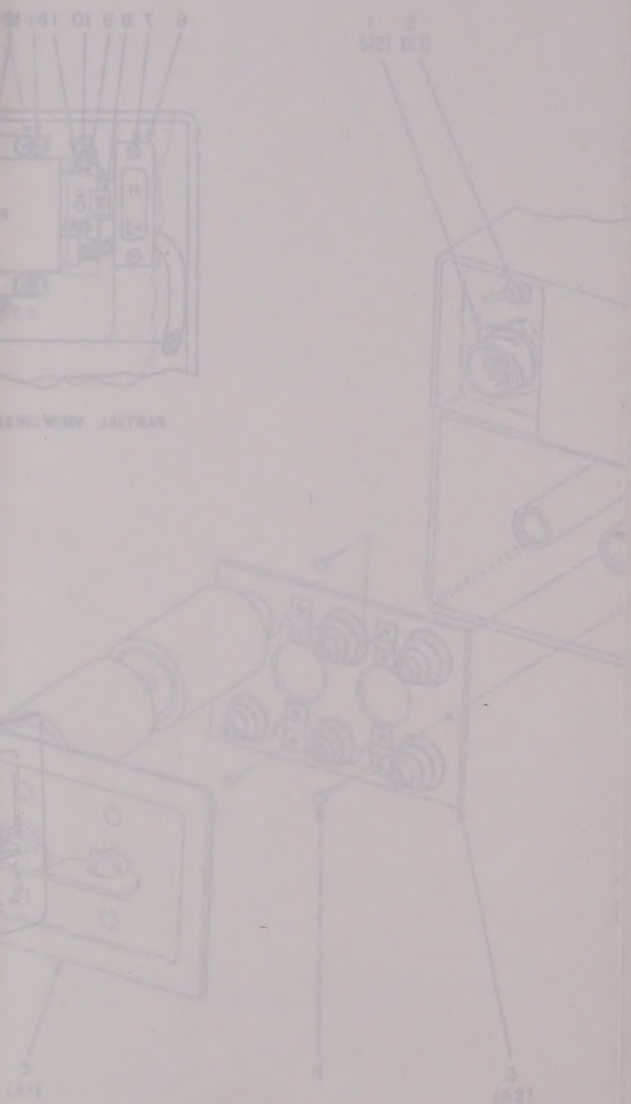

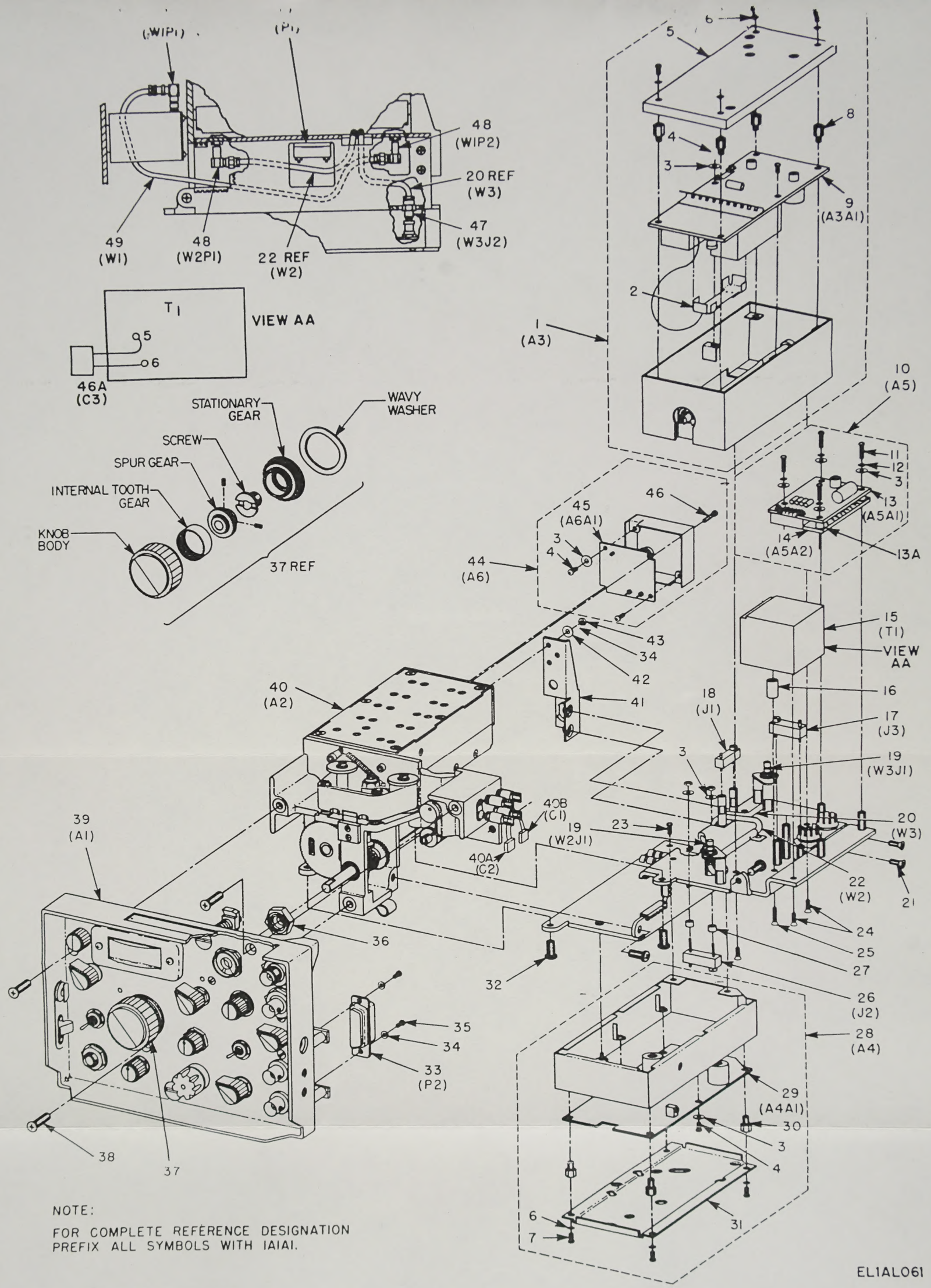

NOTE:

FOR COMPLETE REFERENCE DESIGNATION PREFIX ALL SYMBOLS WITH 1A1A1.

EL1AL061

KEY to fig F0-17

1 *If amplifier assembly*
2 *Actuator switch*
3 *Washer*
4 *Screw*
5 *Cover*
6 *Washer*
7 *Screw*
8 *Post*
9 *Ckt card assy, if. amplifier*
10 *Power supply assembly*
11 *Screw*
12 *Washer*
13 *Ckt card assy, power supply*
13A *Insulating washer*
14 *Ckt card assy, regulator*
15 *Transformer*
16 *Post*
17 *Connector*
18 *Connector*
19 *Connector*
20 *Cable assembly*
21 *Screw*
22 *Cable assembly*
23 *Screw*
24 *Screw*
25 *Screw*
26 *Connector*
27 *Post*
28 *Detector assembly*
29 *Circuit card assembly, detector*
30 *Post*
31 *Cover*
32 *Screw*
33 *Connector*
34 *Washer*
35 *Screw*
36 *Boot*
37 *Knob*
38 *Screw*
39 *Control panel assembly*
40 *Gear and tuner assembly*
40A *Capacitor*
40B *Capacitor*
41 *Bracket*
42 *Washer*
43 *Nut*
44 *Calibration oscillator assembly*
45 *Circuit card assembly, cal oscillator*
46 *Screw*
46A *Capacitor*
47 *Connector*
48 *Connector*
49 *Cable assembly*

Figure F0-17. Radio assembly, parts location.

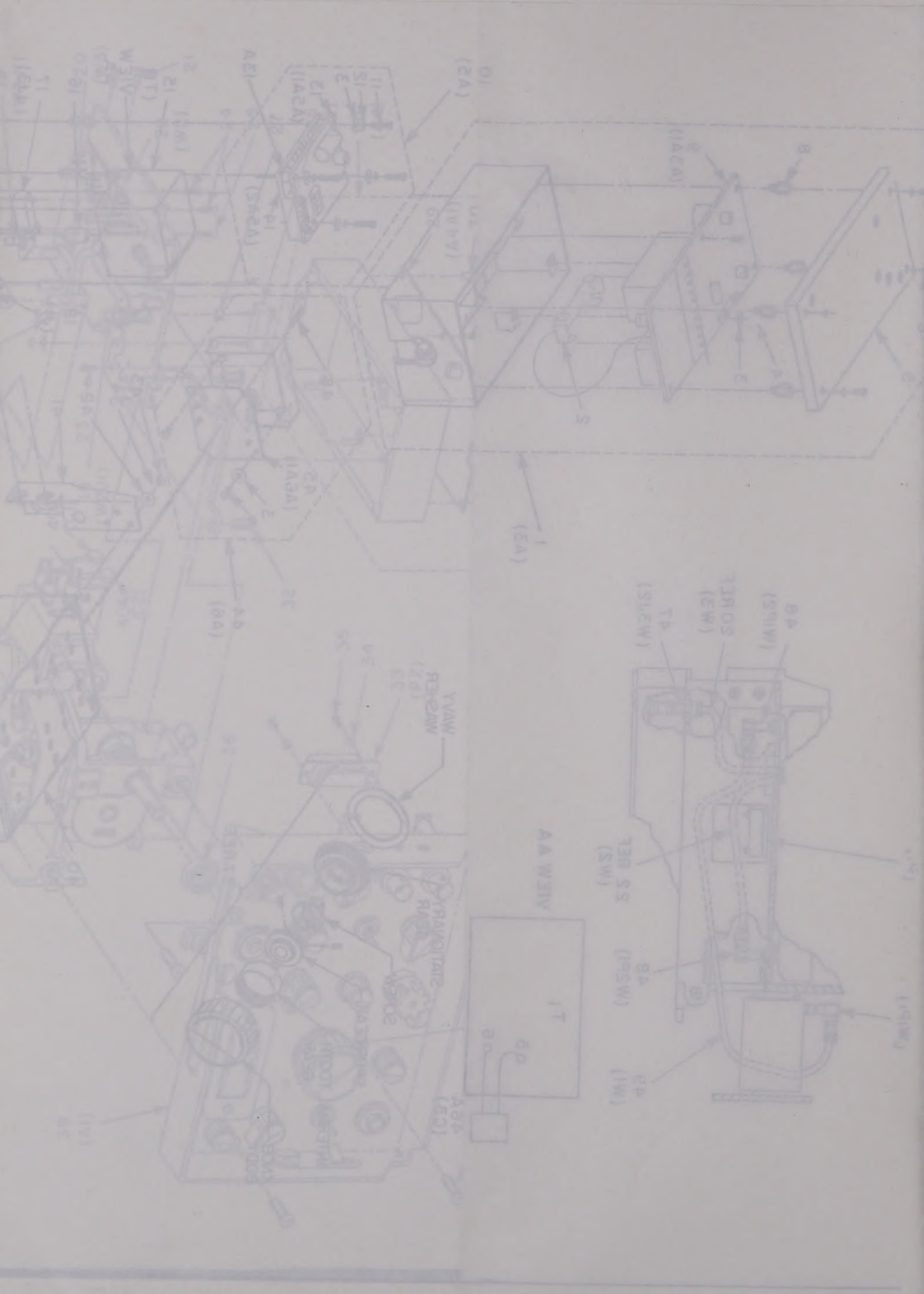

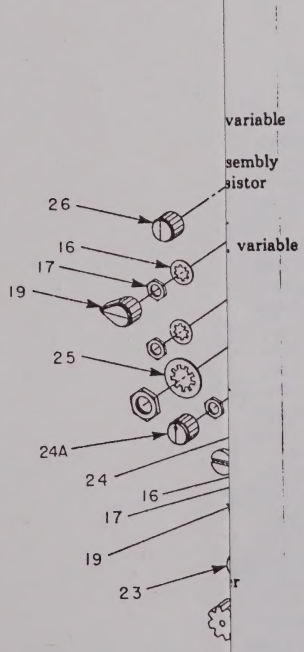

panel, parts location.

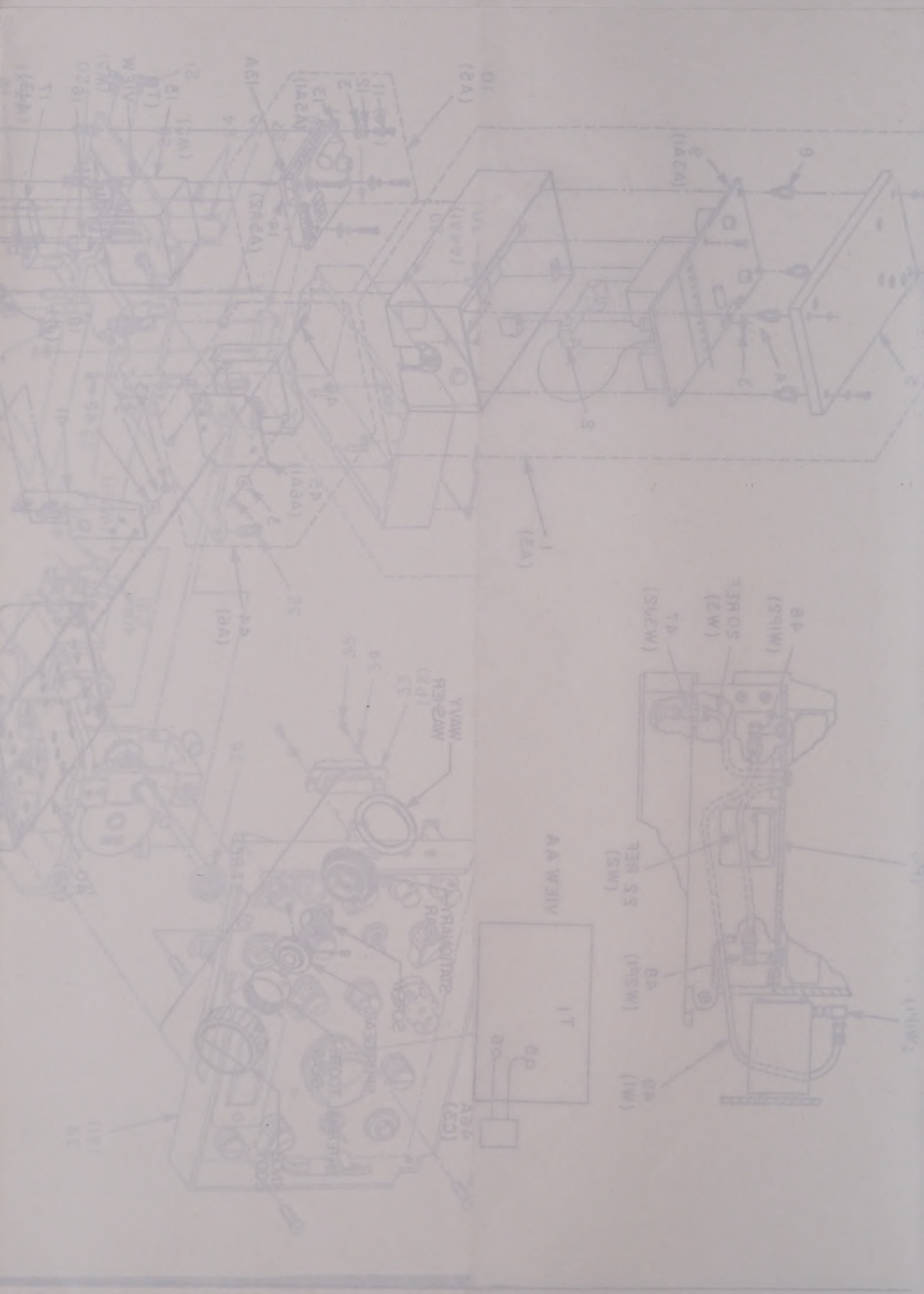

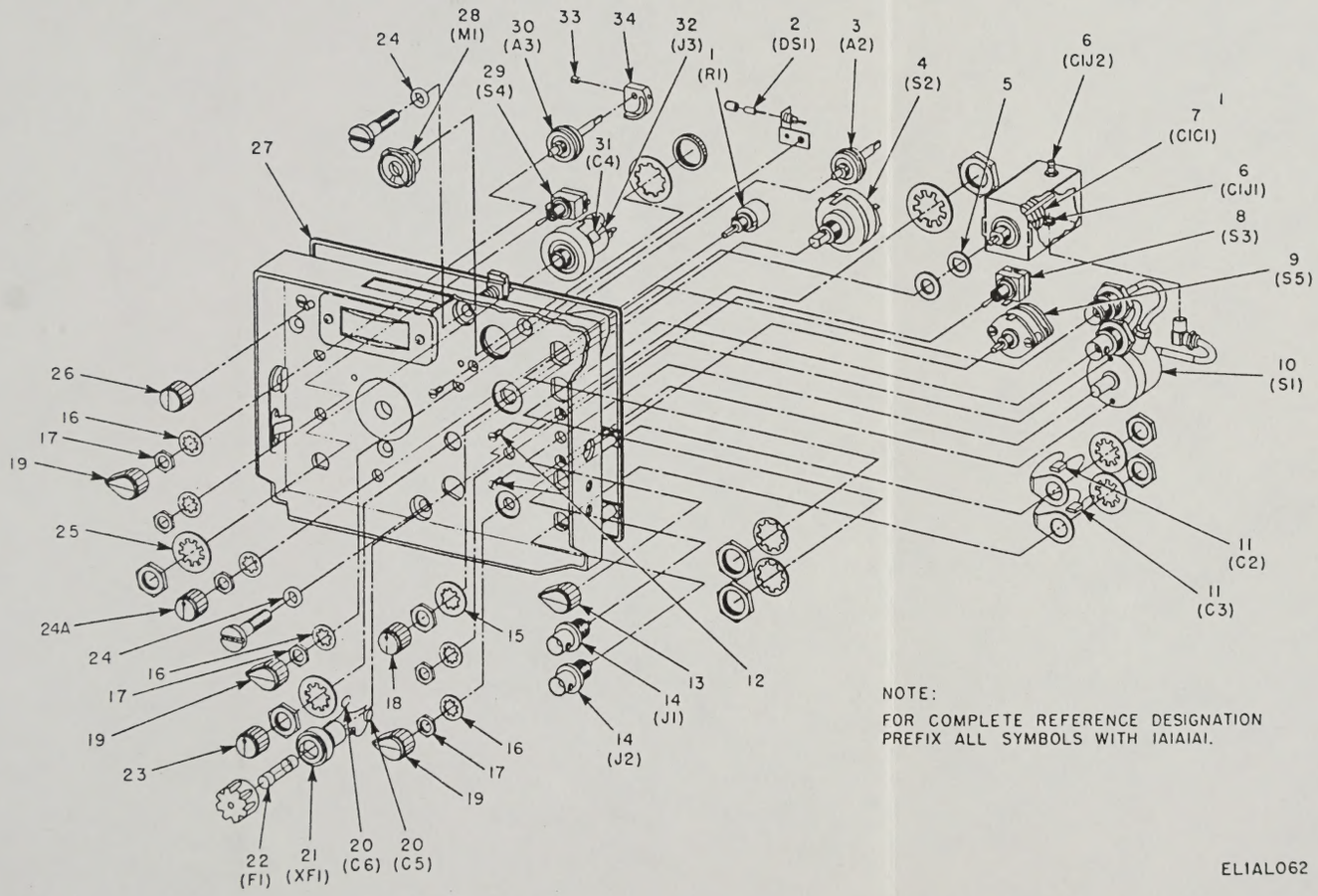

NOTE:
FOR COMPLETE REFERENCE DESIGNATION PREFIX ALL SYMBOLS WITH 1A1A1A1.

EL1AL062

1 Resistor, variable
2 Lamp
3 Detent assembly
4 Switch-resistor
5 Gasket
6 Connector
7 Capacitor, variable
8 Switch
9 Switch
10 Switch
11 Capacitor
12 Screw
13 Knob
14 Connector
15 Washer
16 Washer
17 Nut
18 Knob
17 Nut
18 Knob
19 Knob
20 Capacitor
21 Fuseholder
22 Fuse
23 Knob
24 Packing
24A Knob
25 Washer
26 Knob
27 Gasket
28 Meter
29 Switch
29 Switch
30 Detent assembly
31 Capacitor
32 Jack
33 Pin
34 Cam

Figure FO-18. Front panel, parts location.

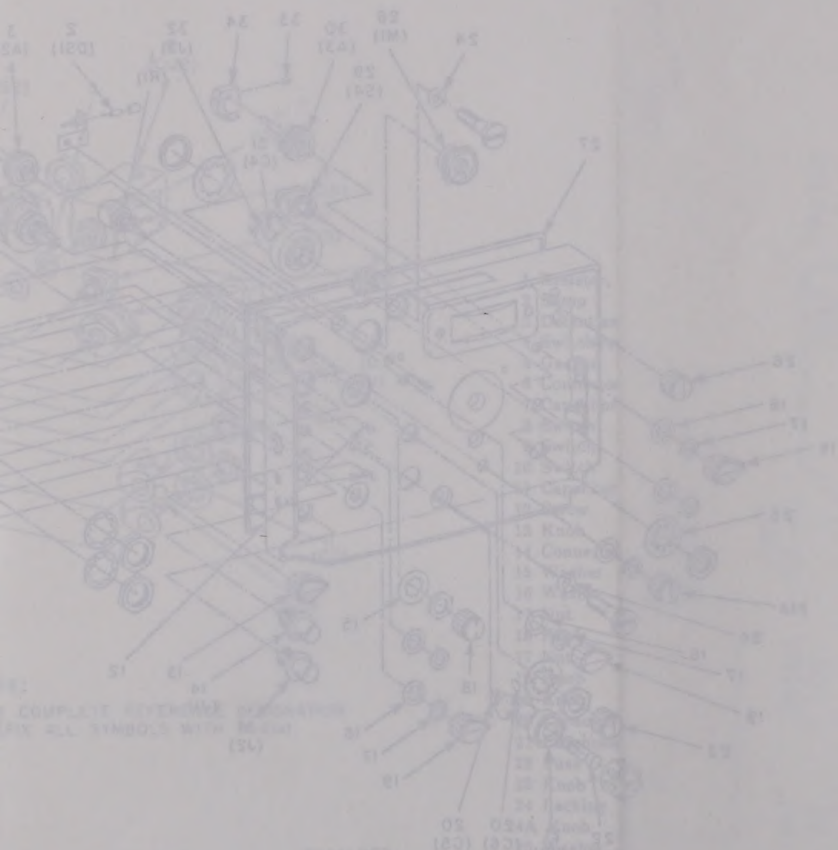

ng)
amp)

amplifier assy
embly
, oscillator mixer
, 3rd rf amplifier
, 2nd rf amplifier
, 1st rf amplifier
, preselector

, motherboard

cator

er assembly, parts location.

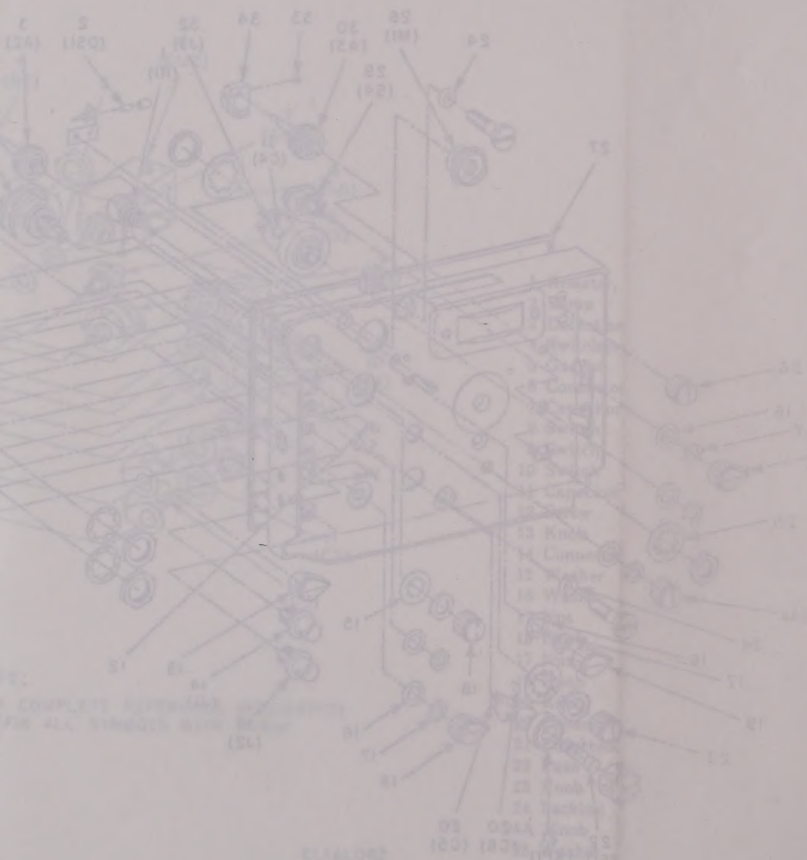

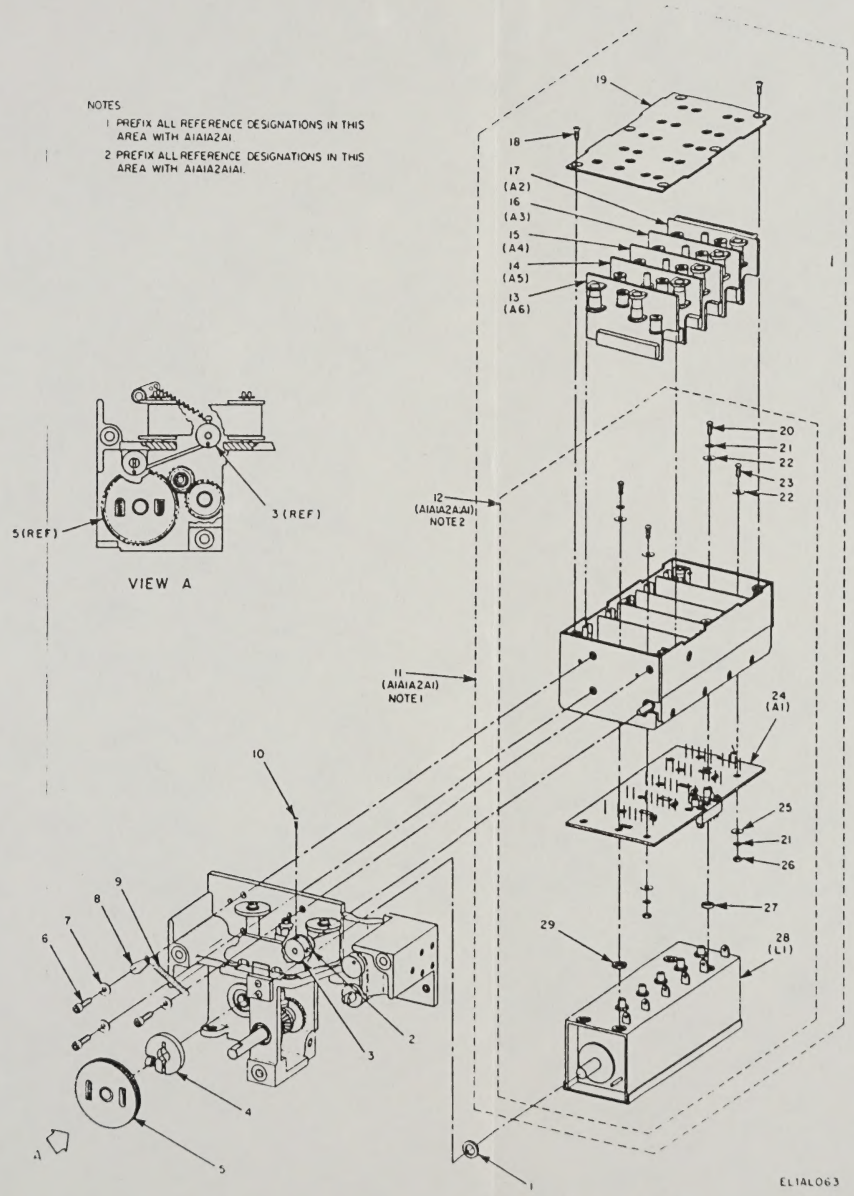

1 Spacer
2 Setscrew
3 Swivel (coupling)
4 Collar (gear clamp)
5 Gear
6 Screw
7 Washer
8 Terminal lug
9 Spring
10 Cap screw
11 Rf tuner and amplifier assy
12 Tuner subassembly
13 Ckt card assy, oscillator mixer
14 Ckt card assy, 3rd rf amplifier
15 Ckt card assy, 2nd rf amplifier
16 Ckt card assy, 1st rf amplifier
17 Ckt card assy, preselector
18 Screw
19 Cover
20 Screw
21 Washer
22 Washer
23 Screw
24 Ckt card assy, motherboard
25 Washer
26 Nut
27 Spacer
28 Variable inducator
29 Spacer

Figure FO-19. Gear and tuner assembly, parts location.

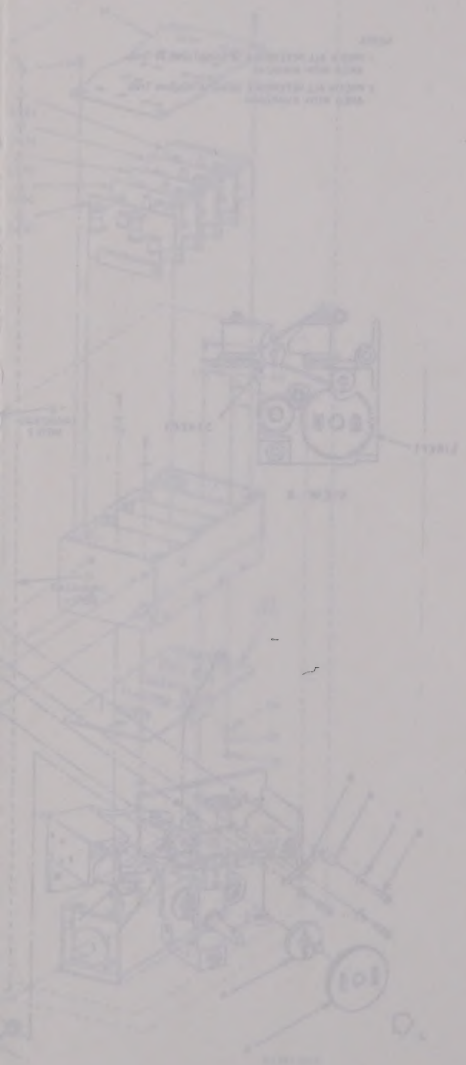

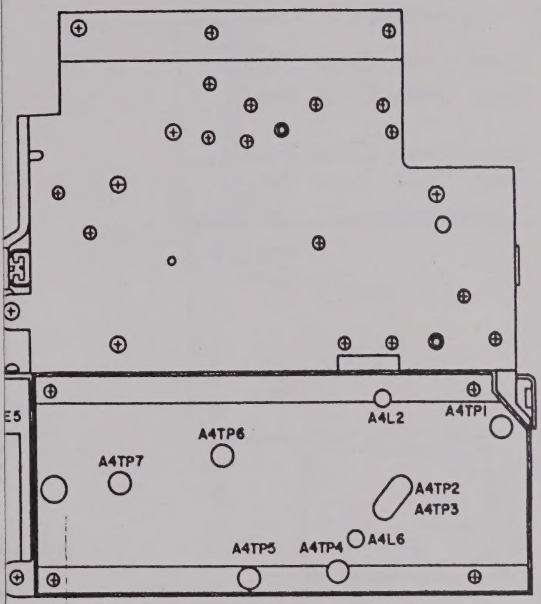

BOTTOM VIEW

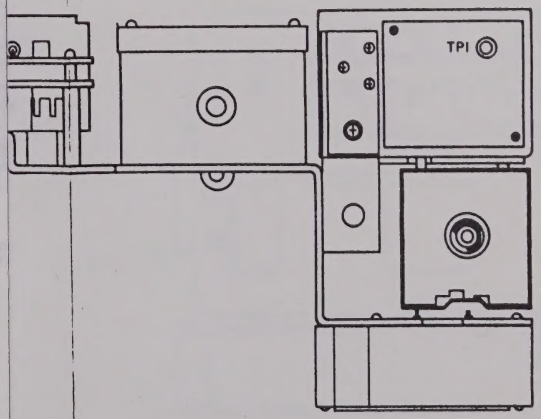

REAR VIEW

EL1AL064

d adjustments location.

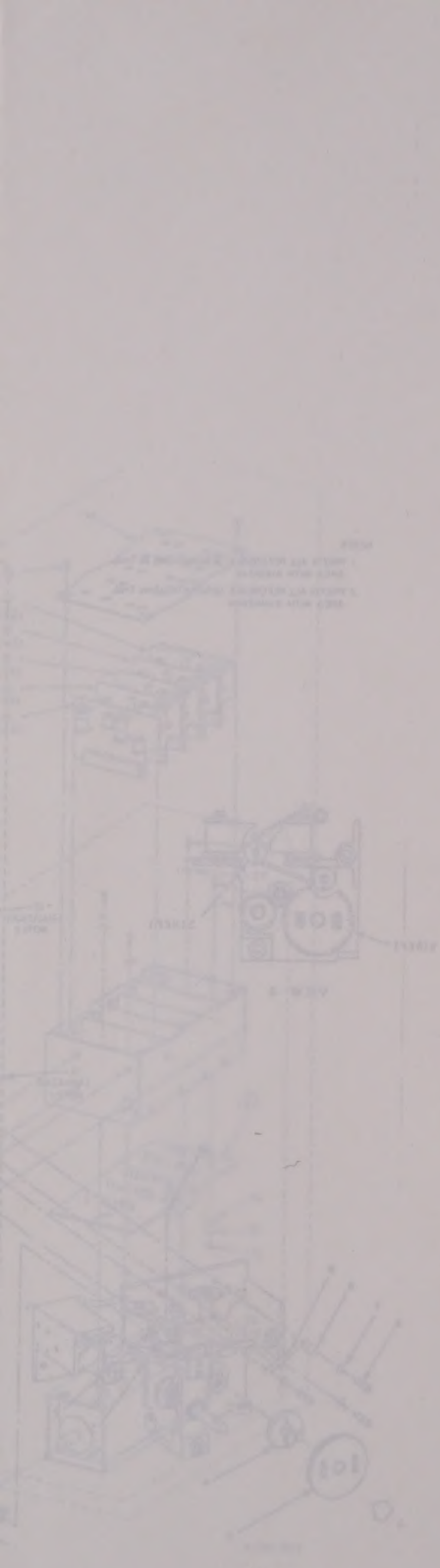

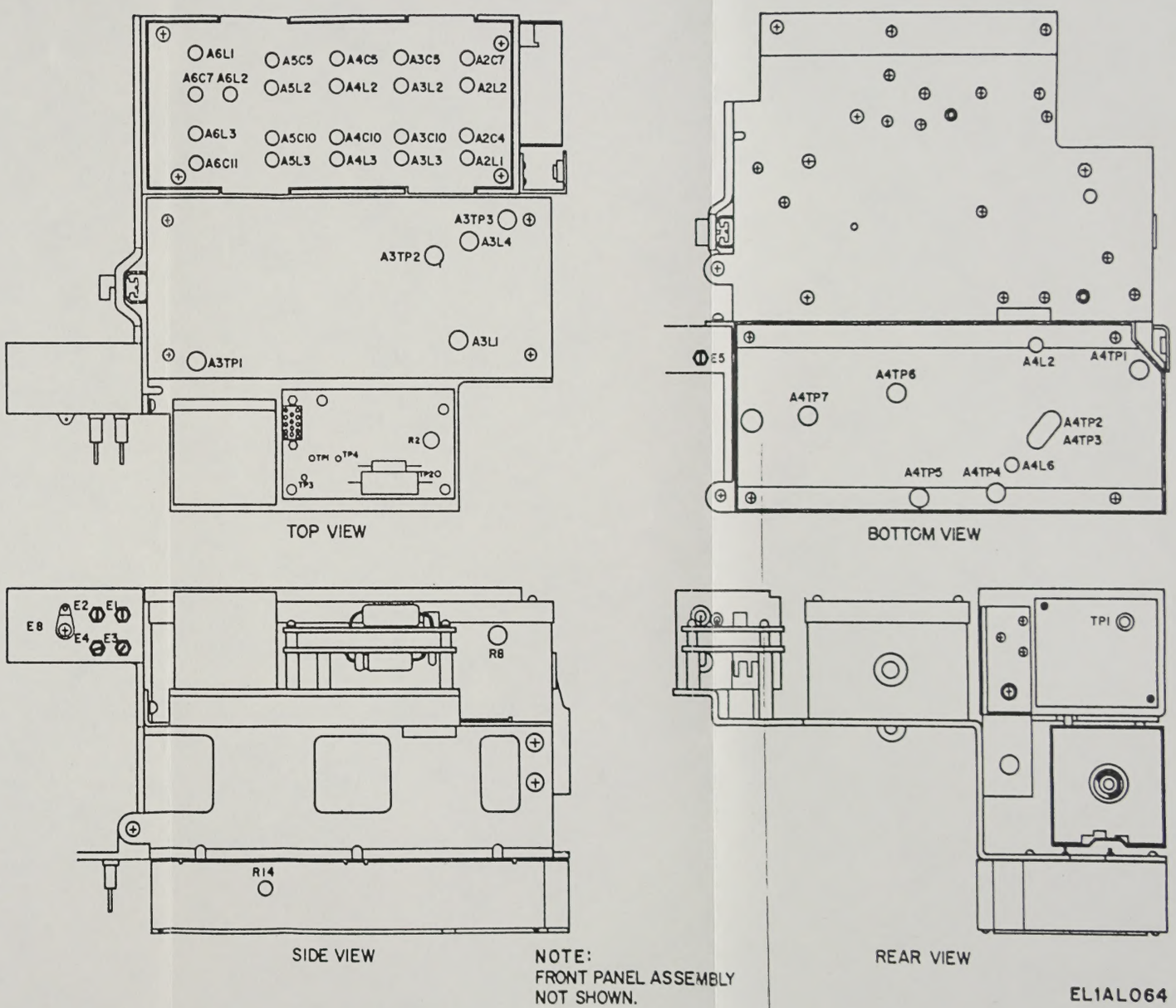

Figure FO-20. Test point and adjustments location.

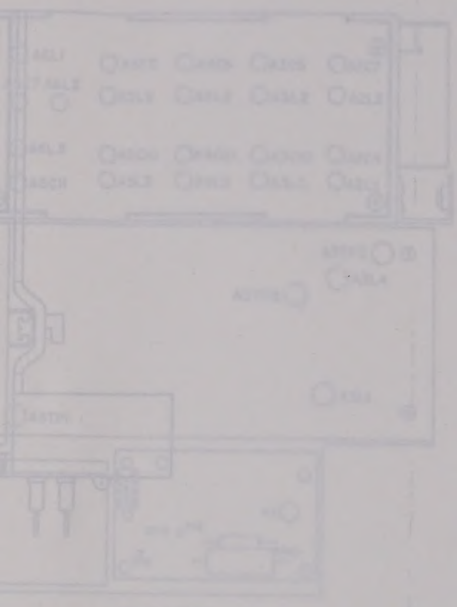

TOP VIEW

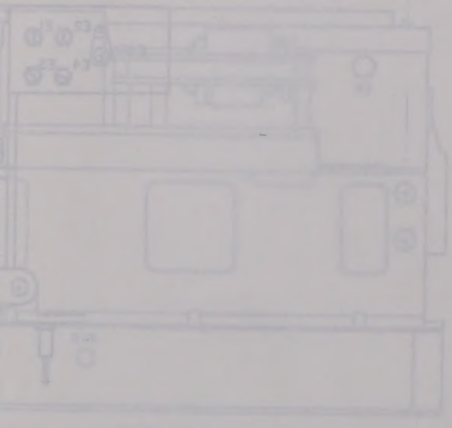

SIDE VIEW

NOTE:
FRONT PANEL ASSEMB
NOT SHOWN.

CAPACITORS, FIXED

CM

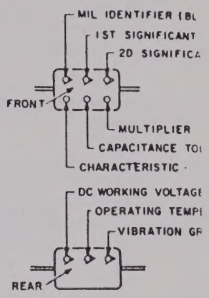

MICA-DIELECTRI

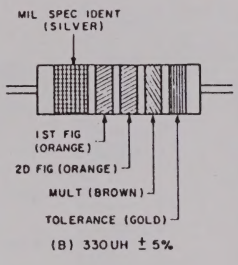

(B) 330UH ± 5%

APSULATED R.F CHOKES. AT A, AN EXAMPLE OF
OKE IS GIVEN. AT B, THE COLOR BANDS FOR
RATED.

TABLE 2
TUBULAR ENCAPSULATED R.F. CHOKES.

	MULTIPLIER	INDUCTANCE TOLERANCE (PERCENT)
	1	
	10	1
	100	2
	1,000	3
		20
		10
L POINT		5

ACTOR BY WHICH THE TWO COLOR FIGURES
BTAIN THE INDUCTANCE VALUE OF THE

FOR MILITARY STANDARD INDUCTORS.

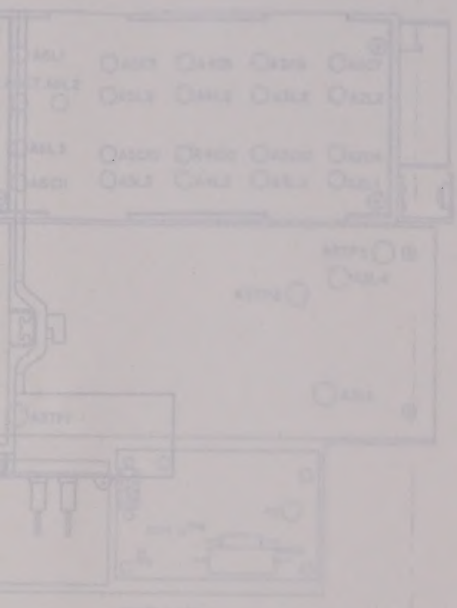

TOP VIEW

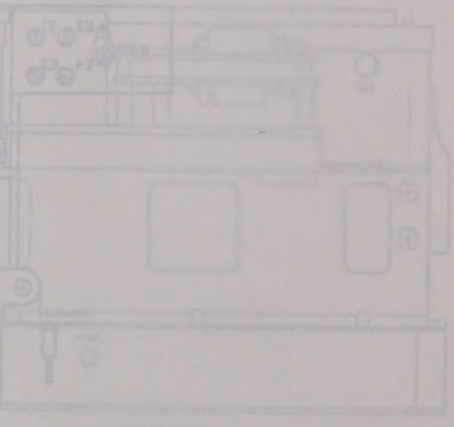

SIDE VIEW

NOTE:
FRONT PANEL ASSEMBLY
NOT SHOWN.

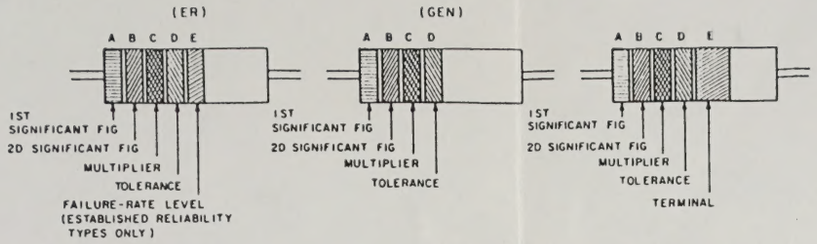

COLOR CODE MARKING FOR COMPOSITION TYPE RESISTORS.

COLOR-CODE MARKING FOR FILM-TYPE RESISTORS.

TABLE I
COLOR CODE FOR COMPOSITION TYPE AND FILM TYPE RESISTORS.

BAND A		BAND B		BAND C		BAND D		BAND E		
COLOR	FIRST SIGNIFICANT FIGURE	COLOR	SECOND SIGNIFICANT FIGURE	COLOR	MULTIPLIER	COLOR	RESISTANCE TOLERANCE (PERCENT)	COLOR	FAILURE RATE LEVEL	TERM.
BLACK	0	BLACK	0	BLACK	1			BROWN	M=1.0	
BROWN	1	BROWN	1	BROWN	10			RED	P=0.1	
RED	2	RED	2	RED	100			ORANGE	R=0.01	
ORANGE	3	ORANGE	3	ORANGE	1,000			YELLOW	S=0.001	
YELLOW	4	YELLOW	4	YELLOW	10,000	SILVER	±10 (COMP. TYPE ONLY)	WHITE		SOLDERABLE
GREEN	5	GREEN	5	GREEN	100,000	GOLD	±5			
BLUE	6	BLUE	6	BLUE	1,000,000	RED	±2 (NOT APPLICABLE TO ESTABLISHED RELIABILITY)			
PURPLE (VIOLET)	7	PURPLE (VIOLET)	7							
GRAY	8	GRAY	8	SILVER	0.01					
WHITE	9	WHITE	9	GOLD	0.1					

BAND A — THE FIRST SIGNIFICANT FIGURE OF THE RESISTANCE VALUE (BANDS A THRU D SHALL BE OF EQUAL WIDTH.)

BAND B — THE SECOND SIGNIFICANT FIGURE OF THE RESISTANCE VALUE.

BAND C — THE MULTIPLIER (THE MULTIPLIER IS THE FACTOR BY WHICH THE TWO SIGNIFICANT FIGURES ARE MULTIPLIED TO YIELD THE NOMINAL RESISTANCE VALUE.)

BAND D — THE RESISTANCE TOLERANCE.

BAND E — WHEN USED ON COMPOSITION RESISTORS, BAND E INDICATES ESTABLISHED RELIABILITY FAILURE-RATE LEVEL (PERCENT FAILURE PER 1,000 HOURS). ON FILM RESISTORS, THIS BAND SHALL BE APPROXIMATELY 1-1/2 TIMES THE WIDTH OF OTHER BANDS, AND INDICATES TYPE OF TERMINAL.

RESISTANCES IDENTIFIED BY NUMBERS AND LETTERS
(THESE ARE NOT COLOR CODED)

SOME RESISTORS ARE IDENTIFIED BY THREE OR FOUR DIGIT ALPHA NUMERIC DESIGNATORS. THE LETTER R IS USED IN PLACE OF A DECIMAL POINT WHEN FRACTIONAL VALUES OF AN OHM ARE EXPRESSED. FOR EXAMPLE:

2R7 = 2.7 OHMS 10RO = 10.0 OHMS

FOR WIRE-WOUND-TYPE RESISTORS COLOR CODING IS NOT USED, IDENTIFICATION MARKING IS SPECIFIED IN EACH OF THE APPLICABLE SPECIFICATIONS.

EXAMPLES OF COLOR CODING

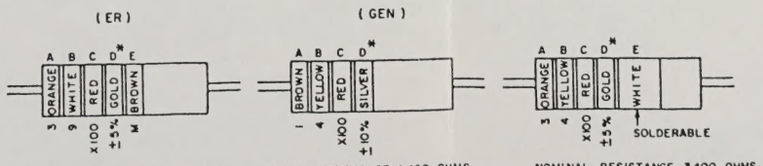

NOMINAL RESISTANCE 3,900 OHMS
RESISTANCE TOLERANCE ±5%
FAILURE RATE LEVEL M

NOMINAL RESISTANCE 1,400 OHMS
RESISTANCE TOLERANCE ±10%

NOMINAL RESISTANCE 3,400 OHMS
RESISTANCE TOLERANCE ±5%
TERMINAL SOLDERABLE

COMPOSITION-TYPE RESISTORS

FILM-TYPE RESISTORS

* IF BAND D IS OMITTED, THE RESISTOR TOLERANCE IS ±20% AND THE RESISTOR IS NOT MIL-STD.

A. COLOR CODE MARKING FOR MILITARY STANDARD RESISTORS.

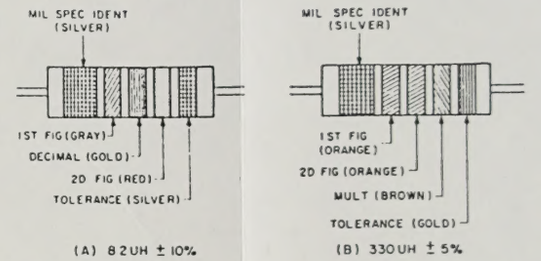

(A) 82UH ±10%

(B) 330UH ±5%

COLOR CODING FOR TUBULAR ENCAPSULATED R.F. CHOKES. AT A, AN EXAMPLE OF THE CODING FOR AN 82UH CHOKE IS GIVEN. AT B, THE COLOR BANDS FOR A 330UH INDUCTOR ARE ILLUSTRATED.

TABLE 2
COLOR CODING FOR TUBULAR ENCAPSULATED R.F. CHOKES.

COLOR	SIGNIFICANT FIGURE	MULTIPLIER	INDUCTANCE TOLERANCE (PERCENT)
BLACK	0	1	
BROWN	1	10	1
RED	2	100	2
ORANGE	3	1,000	3
YELLOW	4		
GREEN	5		
BLUE	6		
VIOLET	7		
GRAY	8		
WHITE	9		
NONE			20
SILVER			10
GOLD	DECIMAL POINT		5

MULTIPLIER IS THE FACTOR BY WHICH THE TWO COLOR FIGURES ARE MULTIPLIED TO OBTAIN THE INDUCTANCE VALUE OF THE CHOKE COIL.

B. COLOR CODE MARKING FOR MILITARY STANDARD INDUCTORS.

CAPACITORS, FIXED

CM

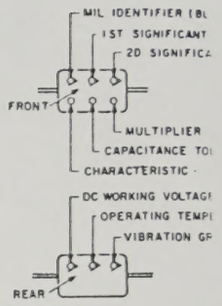

MICA-DIELECTRI

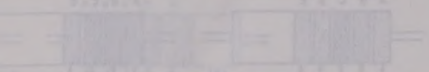

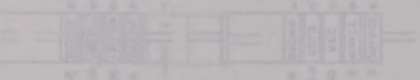

CAPACITORS, FIXED, VARIOUS-DIEL[illegible] STYLES CM, CN, CY AND CB.

CM

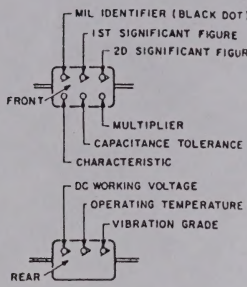

MICA-DIELECTRIC

MULTIPLIER[1]	CAPACITANCE TOLERANCE				CHARACTERISTIC[2]			DC WORKING VOLTAGE	OPERATING TEMP RANGE	VIBRATION GRADE
	CM	CN	CY	CB	CM	CN	CB	CM	CY, CM	CM
1			±20%	±20%		A			-55°C TO +70°C	10-55 Hz
10					B	E	B			
100	±2%		±2%	±2%	C				-55°C TO +85°C	
1,000		±30%			D		D	300		
10,000					E				-55°C TO +125°C	10-2,000Hz
	±5%				F			500		
									-55°C TO +150°C	
0.1			±5%	±5%						
0.01	±10%	±10%	±10%	±10%						

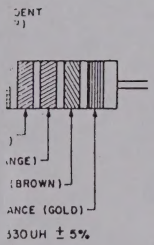

330UH ± 5%

ES. AT A, AN EXAMPLE OF
B, THE COLOR BANDS FOR

D R.F. CHOKES.

TANCE TOLERANCE (PERCENT)
1
2
3
20
10
5

E TWO COLOR FIGURES
CE VALUE OF THE

RE COMPENSATING, STYLE CC.

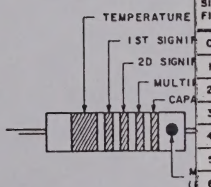

1ST SIG FIG.	2D SIG FIG.	MULTIPLIER[1]	CAPACITANCE TOLERANCE		MIL ID
			CAPACITANCES OVER 10 UUF	CAPACITANCES 10 UUF OR LESS	
0	0	1		±2.0 UUF	CC
1	1	10	±1%		
2	2	100	±2%	±0.25 UUF	
3	3	1,000			
4	4				
5	5		±5%	±0.5 UUF	
6	6				
7	7				
8	8	0.01*			
9	9	0.1*	±10%		
		0.1		±1.0 UUF	
		0.01			

AXIAL LE

UMBER BY WHICH THE TWO SIGNIFICANT (SIG) FIGURES ARE MULTIPLIED TO OBTAIN

HARACTERISTICS DESIGNATED IN APPLICABLE SPECIFICATIONS MIL-C-5,
2B, AND MIL-C-10950C RESPECTIVELY.

TEMPERATURE RANGE AND VOLTAGE-TEMPERATURE LIMITS DESIGNATED IN

ENT IN PARTS PER MILLION PER DEGREE CENTIGRADE

METALLIC PIGMENTS ARE UNDESIRABLE.

ARD INDUCTORS.

ctor, and capacitor color code chart.

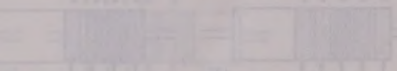

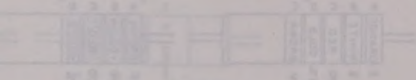

CAPACITORS, FIXED, VARIOUS-DIELECTRICS, STYLES CM, CN, CY, AND CB.

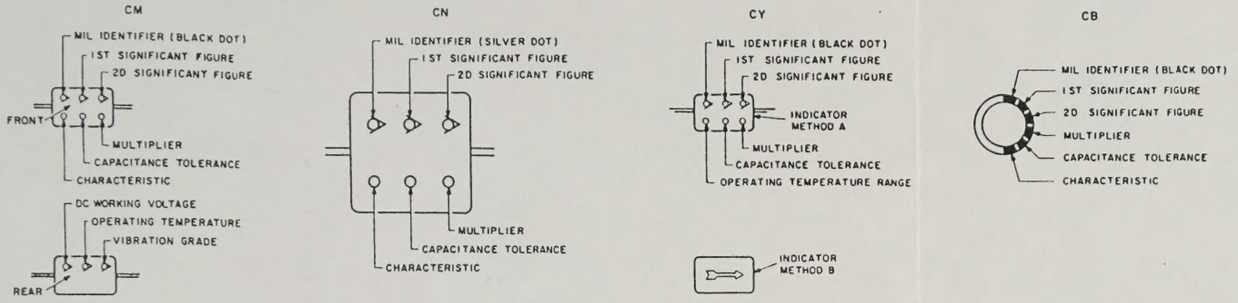

TABLE 3 — FOR USE WITH STYLES CM, CN, CY AND CB.

COLOR	MIL ID	1ST SIG FIG.	2D SIG FIG	MULTIPLIER[1]	CAPACITANCE TOLERANCE				CHARACTERISTIC[2]			DC WORKING VOLTAGE	OPERATING TEMP RANGE	VIBRATION GRADE
					CM	CN	CY	CB	CM	CN	CB	CM	CY, CM	CM
BLACK	CM,CY CB	0	0	1			±20%	±20%		A			-55°TO+70°C	10-55 HZ
BROWN		1	1	10					B	E	B			
RED		2	2	100	±2%		±2%	±2%	C				-55°TO+85°C	
ORANGE		3	3	1,000		±30%			D		D	300		
YELLOW		4	4	10,000					E				-55°TO+125°C	10-2,000HZ
GREEN		5	5		±5%				F			500		
BLUE		6	6										-55°TO+150°C	
PURPLE (VIOLET)		7	7											
GRAY		8	8											
WHITE		9	9											
GOLD				0.1			±5%	±5%						
SILVER	CN			0.01	±10%	±10%	±10%	±10%						

TABLE 4 — TEMPERATURE COMPENSATING, STYLE CC.

COLOR	TEMPERATURE COEFFICIENT[4]	1ST SIG FIG.	2D SIG FIG.	MULTIPLIER[1]	CAPACITANCE TOLERANCE		MIL ID
					CAPACITANCES OVER 10 UUF	CAPACITANCES 10 UUF OR LESS	
BLACK	0	0	0	1		±2.0 UUF	CC
BROWN	-30	1	1	10	±1%		
RED	-80	2	2	100	±2%	±0.25 UUF	
ORANGE	-150	3	3	1,000			
YELLOW	-220	4	4				
GREEN	-330	5	5		±5%	±0.5 UUF	
BLUE	-470	6	6				
PURPLE (VIOLET)	-750	7	7				
GRAY		8	8	0.01*			
WHITE		9	9	0.1*	±10%		
GOLD	+100			0.1		±1.0 UUF	
SILVER				0.01			

1 THE MULTIPLIER IS THE NUMBER BY WHICH THE TWO SIGNIFICANT (SIG) FIGURES ARE MULTIPLIED TO OBTAIN THE CAPACITANCE IN UUF.

2 LETTERS INDICATE THE CHARACTERISTICS DESIGNATED IN APPLICABLE SPECIFICATIONS MIL-C-5, MIL-C-25D, MIL-C-11272B, AND MIL-C-10950C RESPECTIVELY.

3. LETTERS INDICATE THE TEMPERATURE RANGE AND VOLTAGE-TEMPERATURE LIMITS DESIGNATED IN MIL-C-11015D.

4 TEMPERATURE COEFFICIENT IN PARTS PER MILLION PER DEGREE CENTIGRADE

* OPTIONAL CODING WHERE METALLIC PIGMENTS ARE UNDESIRABLE.

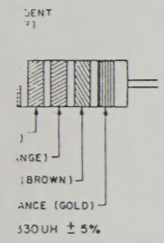

330UH ± 5%

ES. AT A, AN EXAMPLE OF
B, THE COLOR BANDS FOR

D R.F. CHOKES.

TANCE TOLERANCE (PERCENT)
1
2
3
20
10
5

TWO COLOR FIGURES
CE VALUE OF THE

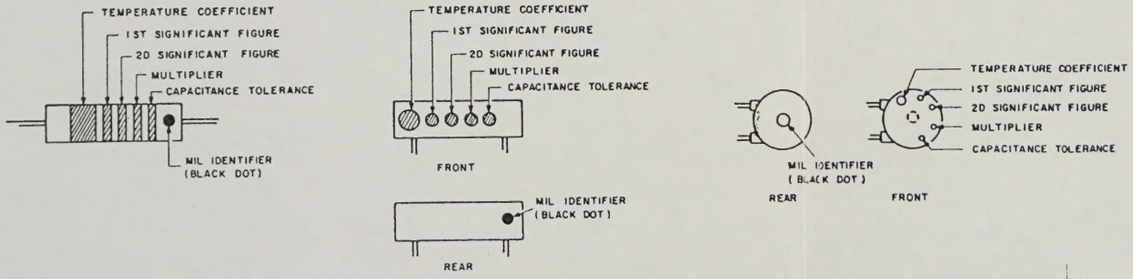

ARD INDUCTORS.

C. COLOR CODE MARKING FOR MILITARY STANDARD CAPACITORS.

Figure FO-21. Resistor, inductor, and capacitor color code chart.